This information was extracted from a Windows .hlp file, XLX_TRM.HLP. Typographical errors have been left in this extracted version.
-mr_slug

Contents

System Specifications

- Dimensions
- Environmental and Regulatory Specifications
- Power Supply

Connectors and Headers

- Locations on the System Baseboard
- Power and Ground Connector J0710
- IDE Header J0810
- Power Connector J0840
- Power Connectors J0850 and J0860
- Power Supply Enable Header J0861
- Front Panel Header J0881
- Floppy Header J0880
- Power and Ground Connector J0770
- SIMM Sockets: J0550, J0551, J0650, and J0651
- Speaker Header J0590
- Fan Header J0492
- SCSI Disk Activity Header J0190
- Onboard SCSI Headers J0060 and J0080
- 8514/A Header J0410
- Memory Module Connector J0520
- CPU Module Connector J0730
- Parallel Connector J0600 (Top)
- Video Connector J0600 (Bottom)
- Serial Connectors J0700
- Keyboard and Mouse Connectors J0800

Peripherals

- 3.5-inch, Diskette Drive

The Setup Program

- Introduction
- Turning on Your System
- Power-on Self-Test
- Running Setup
- Setup Page 1
- Setup Page 2
- Setup Page 3
- Setup Page 4

EISA Configuration Utility

- Running the EISA Configuration Utility
- Other Configuration Utilities
- Hot Keys

Video Drivers

- Installing Video Drivers

Error and Informational Messages

- POST and Boot Error Messages
- Countdown Codes for Run-time Errors
- Beep Codes and Error Messages

System Baseboard Jumpers

- Before You Begin Moving Jumpers
- System Baseboard Jumper Options
- Locations of Jumpers on the Baseboard
- Flash Memory Jumper E0190
- VGA Jumper E0290
- Floppy Protection Jumper E0291
- NVRAM Jumper E0292
- Password Jumper E0390
- SIMM0 Jumper E0391
- SIMM1 Jumper E0392
- Video Memory Jumper E0720
- Flash Reprogramming Power Jumper E0721
- Video Address Jumper E0722

Baseboard Memory

- Memory Map
- I/O Map
- Interrupts
- Direct Memory Access (DMA) Channels
- System Baseboard SIMMs
- Installing the SIMMs
- Removing the SIMMs
- Video Memory DRAMs
- DRAM Sockets

Spare Parts

- Parts List
- Spare Parts (1-7) Illustration
- Spare Parts (8-13) Illustration

Dimensions

Dimension	Specification
Width	21.54 cm (8.48 inches)
Depth	58.42 cm (23.0 inches)
Height	51.82 cm (20.4 inches)
Weight	20 kg (44.5 pounds) as shipped from the factory 32 kg (70.5 pounds) fully loaded

Environmental and Regulatory Specifications

Parameter	Specification
Temperature	
Nonoperating	-40° to 65°C (-40° to 149°F)
Operating	10° to 35°C (50° to 95°F); derated 0.5°C for every 1000 ft (305 m)
Humidity	
Operating wet bulb	Not to exceed 26°C (79°F) (with floppy disk drive or hard disk drive)
Nonoperating	95% relative humidity (noncondensing) at 55°C (131°F)
Operating	85% relative humidity (noncondensing) at 40°C (104°F)
Shock	
Nonoperating	20 g, 11 msec, 1/2 sine
Operating	2.0 g, 11 msec, 1/2 sine
Vibration	
Non-operating (packaged)	Random test: .015 g^2/Hz at 10 Hz to 40 Hz sloping to .00015 g^2/Hz at 500 Hz
Non-operating (unpackaged)	Random test: .001 g^2/Hz at 5 Hz sloping to .01 g^2/Hz at 20 Hz and .01 g^2/Hz from 20 Hz to 500 Hz
Altitude	
Nonoperating	To 50,000 ft (15,240 m)
Operating	To 10,000 ft (3,048 m)
Maximum idle noise	Typical <42 dBA at 25°C with four internal hard disk drives (measured at 1 meter from the system with the peripherals idle). The noise of the variable-speed system fan will increase with temperature and power load. Note that the selection of peripherals may change the noise level.
Electrostatic discharge (ESD)	Tested to 25 kV; no component damage
AC Input Power	
115 VAC	100 to 120 VAC, 5.0 A, 50/60 Hz
230 VAC	200 to 240 VAC, 4.0 A, 50/60 Hz
Electromagnetic Interference (EMI)	FCC 47 Class B CFR Parts 2 and 15, Certified Class B DOC CRC c. 1374 Class B VDE 0871/6.78 Class B Vfg 1046/1984 Limit B CISPR 22/85, Class B VCCI Class 2 ITE

Safety	UL 1950, 1st edition CSA C22.2 No. 950M-89 TUV to EN 60950 ZH1/618 IEC 950 NEMKO EN 60950, EMKO-TUE(74-SEC) 203 T/90 AS3260-1988

Power Supply

A 230 watt power supply that is switch-selectable for 115 (100 - 120) or 230 (200 - 240) VAC powers the X-series deskside/LX system. The table lists the output ratings for the power supply.

The table lists 150 watts available for +5 volts and 96 watts for +12 volts. You will have to adjust your loads so that the combined total wattage for your system configuration is less than 230 watts.

For information about calculating the power consumption for your system configuration, see your product guide.

The combined continuous current drainCurrentDrain.5 for -12 volts and -5 volts should not exceed 1 ampere. For example, if the current for -5 volts is 0.0 amperes, the maximum current rating for -12 volts goes to 1.0 ampere.

Voltage	Maximum Continuous	Minimum Load	Peak Surge	Watts
+5	30.0 A	3.0 A	30.0 A	150.0 W
-5	0.5 A	0.0 A	0.5 A	2.5 W
+12	8.0 A	0.25 A	11.0 A	96.0 W
-12	1.0 A	0.0 A	Maximum capacitive load <350 mF	12.0 W

Related Topics:

Current Drain

Current Drain

As an overall current drain limitation on the power supply, do not exceed the maximum output capacity of 30 amperes at +5 volts. The EISA slots on the system baseboard are rated at a maximum of 4.5 A per slot. The EISA specification recommends supporting an average of 2.0 A per slot. The average current consumption should not exceed 3.0 A per slot. The cooling efficiency varies per slot; therefore, ensure that adequate cooling is available in the target slot, especially in an expansion slot drawing more than 2.0 A.

Element	+5 V (typical)	+12 V	-12 V
System baseboard (32 MB memory)	4.0 A	0.06 A	0.06 A
CPU Modules:			
60 MHz Pentium CPU, 256 KB cache	6.0 A		
CPU2/66, IDT 128 KB cache	4.1 A		
CPU2/50, Intel 64 KB cache	3.3 A		
CPU2/66, no cache	3.3 A		
CPU50, 256 KB cache	4.5 A		
CPU33, Intel 128 KB cache	4.4 A		
CPU33, no cache	3.2 A		
CPU25, no cache	3.0 A		
Integrated cache CPU module (128 KB)	2.5 A		
Cache modules:			
Intel 64 KB	0.8 A		
Intel 128 KB	1.2 A		
IDT 128 KB	0.8 A		
Memory module:			
4 MB installed	2.0 A		
8 MB installed	2.1 A		
64 MB installed	2.4 A		
128 MB installed	2.8 A		
256 MB installed	3.0 A		
3.5-inch floppy drive	0.5 A		
EISA bus slot	2.0 A		
Cooling fan		0.3 A	

Locations on the System Baseboard

The top view of the system baseboard shows the location of the following connectors and headers:

A. J0710.8, CPU module power and ground connector

B. J0810.9, IDE header

C. J0840, 12-pin power connector

D. J0850, 6-pin power connector

E. J0860, 6-pin power connector

F. J0861, 2-pin power supply enable header

G. J0881, front panel header

H. J0880, floppy disk drive header

I. J0770, CPU module power and ground connector

J. J0650 and J0651, Bank 1 sockets; J0550 and J0551KGMPF9, Bank 0 sockets

K. J0590, speaker header

L. J0492, fan header

M. J0190, SCSI hard disk drive activity header

N. J0060, onboard SCSI header A; J0080N.LR_S, onboard SCSI header B

O. J0410, VESA-compatible 8514/A header

P. J0520, memory module connector

Q. J0730, CPU module main connector

R. J0600 (top), parallel connector and J0600 (bottom)PVG65R video connector

S. J0700, serial connectors (top: COM1, bottom: COM2)

T. J0800, PS/2-compatible keyboard (bottom) and PS/2-compatible mouse (top) connectors

Expansion slots:

J0400 EISA expansion slot 1, master

J0302 EISA expansion slot 2, master

J0300 EISA expansion slot 3, master

J0200 EISA expansion slot 4, master

J0101 EISA expansion slot 5, master

J0100 EISA expansion slot 6, master

J0001 EISA expansion slot 7, master

J0000 EISA expansion slot 8, master

The pin numbers for the headers and internal connectors are indicated on the system board.

Related Topics:

Top View of System Baseboard

Top View of System Baseboard

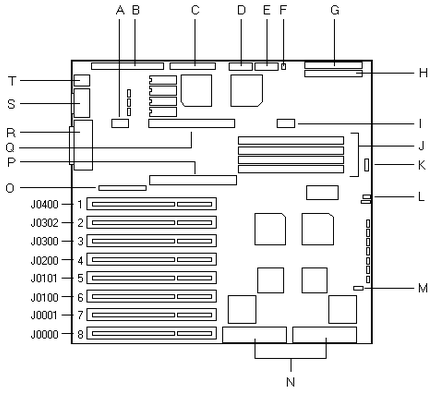

OM02322

Power and Ground Connector J0710

Tag A in the baseboard illustration shows the location of the CPU module power and ground connector J0710, and the table below lists its pinout. (Tag Q shows the location of the CPU module main connector J0730. Tag I shows the location of the CPU module power and ground connector J0770.)

Pin #	Signal	Pin #	Signal
1	Ground	2	+5 V
3	Ground	4	+5 V
5	Ground	6	+5 V

IDE Header J0810

Tag B in the baseboard illustration shows the location of the IDE header J0810, and the following table lists its pinout.

Pin #	Signal	Pin #	Signal
1	Reset	2	Ground
3	Data bit 7	4	Data bit 8
5	Data bit 6	6	Data bit 9
7	Data bit 5	8	Data bit 10
9	Data bit 4	10	Data bit 11
11	Data bit 3	12	Data bit 12
13	Data bit 2	14	Data bit 13
15	Data bit 1	16	Data bit 14
17	Data bit 0	18	Data bit 15
19	Ground	20	Key (pin missing)
21	DMA request 3	22	Ground
23	I/O write	24	Ground
25	I/O read	26	Ground
27	I/O channel ready	28	Address latch enable
29	DMA acknowledge 3	30	Ground
31	Interrupt request 14	32	I/O channel size 16
33	Address bit 1	34	Ground
35	Address bit 0	36	Address bit 2
37	Host chip select 0	38	Host chip select 1
39	Disk activity	40	Ground

Power Connector J0840

Tag C in the baseboard illustration shows the location of power connector J0840, and the following table lists its pinout. This 12-pin connector is keyed for two 6-pin power supply connectors PS1 and PS2. These 6-pin connectors are keyed and can be installed only in one way.

Pin #	Signal	P1 Color	Pin #	Signal	P2 Color
1	Power good	Orange	7	Ground	Black
2	+5 V	Red	8	Ground	Black
3	+12 V	Yellow	9	-5 V	White
4	-12 V	Blue	10	+5 V	Red
5	Ground	Black	11	+5 V	Red
6	Ground	Black	12	+5 V	Red

Power Connectors J0850 and J0860

Tags D and E in the baseboard illustration show the location of the identical power connectors J0850 and J0860, and the following table lists their pinouts. One of the 6-pin P3 power supply connectors connects to J0850 and the other connects to J0860.

Pin #	Signal	P3 Color	Pin #	Signal	P3 Color
1	+5 V	Red	4	Ground	Black
2	+5 V	Red	5	Ground	Black
3	+5 V	Red	6	Ground	Black

Power Supply Enable Header J0861

Tag F in the baseboard illustration shows the location of the power supply enable header J0861, and the following table lists its pinout.

Pin #	Signal	Color
1	Remote enable	Purple
2	Return	Black

Front Panel Header J0881

Tag G in the baseboard illustration shows the location of the front panel header J0881, and the following table lists its pinout.

Pin #	Signal	Function
1	SPKDAT	Speaker data
2	+5 V	Speaker power
3	On/Off	Remote power enable
4	0 V	Remote power return
5	FP Reset	Front panel reset
6	0 V	
7	Pwr LED	Power on LED
8	0 V	
9	SC 1 LED	SCSI controller 1 LED
10	SC 1 LED	SCSI controller 1 return
11	SC 2 LED	SCSI controller 2 LED
12	SC 2 LED	SCSI controller 2 return
13	KEYBD	Keyboard keylock
14	0 V	
15	+5 V	
16	+5 V	LCD controller power/reset
17	(KEY)	(Missing pin)
18	+5V	
19	RS	Register select
20	RW	Read/write
21	0 V	
22	EN	Enable
23	DB0	I/O data 0
24	DB1	I/O data 1
25	0 V	
26	DB2	I/O data 2
27	DB3	I/O data 3
28	DB4	I/O data 4
29	0 V	
30	DB5	I/O data 5
31	DB6	I/O data 6
32	DB7	I/O data 7
33	0 V	
34	0 V	

Floppy Header J0880

Tag H in the baseboard illustration shows the location of floppy header J0880, and the following table lists its pinout.

Pin #	Signal	Pin #	Signal

1	Ground	18	Head direction
2	Density select	19	Ground
3	Ground	20	Step
4	Not connected	21	Ground
5	Key (pin missing)	22	Write data
6	Extended density in	23	Ground
7	Ground	24	Write enable
8	Index	25	Ground
9	Ground	26	Track 0
10	Motor A on	27	Ground
11	Ground	28	Write protect
12	Drive B select	29	Extended density out
13	Ground	30	Read data
14	Drive A select	31	Ground
15	Ground	32	Head select side 1
16	Motor B on	33	High density out
17	Ground	34	Disk change

Power and Ground Connector J0770

Tag I in the baseboard illustration shows the location of the CPU module power and ground connector J0770, and the following table lists its pinout. (Tag Q shows the location of the CPU module main connector J0730. Tag A shows the location of the CPU module power and ground connector J0710.)

Pin #	Signal	Pin #	Signal
1	Ground	2	Vcc
3	Reserved	4	Reserved
5	Reserved	6	Vcc

SIMM Sockets: J0550, J0551, J0650, and J0651

Tag J in the baseboard illustration shows the location of SIMM sockets J0550, J0551, J0650, and J0651 for memory banks 0 and 1. The following table lists the memory banks and their associated SIMM sockets.

Bank	Socket
0	J0550
0	J0551
1	J0650
1	J0651

Speaker Header J0590

Tag K in the baseboard illustration shows the location of speaker header J0590, and the following table lists its pinout.

Pin #	Signal
1	SPKDAT (speaker data)
2	No connection
3	No connection
4	Return

Fan Header J0492

Tag L in the baseboard illustration shows the location of fan header J0492, and the following table lists its pinout.

Pin #	Signal
1	Ground
2	+12 V
3	Ground

SCSI Disk Activity Header J0190

Tag M in the baseboard illustration shows the location of the SCSI disk activity header J0190, and the following table lists its pinout.

Front Panel LED #1		Front Panel LED #2	
Pin #	Signal	Pin #	Signal
1	Not connected	3	Hard disk active
2	Hard disk active	4	Not connected

Onboard SCSI Headers J0060 and J0080

Tag N in the baseboard illustration shows the location of the channel A and B headers for the onboard Adaptec AIC-7770 dual SCSI controller. The following table lists the pinouts for headers A, J0060, and B, J0080; they are identical.

Pin #	Signal	Pin #	Signal
1	Ground	26	-DB0
2	Ground	27	-DB1
3	Ground	28	-DB2
4	Ground	29	-DB3
5	Ground	30	-DB4
6	Ground	31	-DB5
7	Ground	32	-DB6
8	Ground	33	-DB7
9	Ground	34	-DBP
10	Ground	35	Ground
11	Ground	36	Ground
12	Reserved	37	Reserved
13	Open	38	Termpwr
14	Reserved	39	Reserved
15	Ground	40	Ground
16	Ground	41	-ATN
17	Ground	42	Ground
18	Ground	43	-BSY
19	Ground	44	-ACK
20	Ground	45	-RST
21	Ground	46	-MSG
22	Ground	47	-SEL
23	Ground	48	-C/D
24	Ground	49	-REQ
25	Ground	50	-I/O

* The minus sign next to the signal indicates active low.

8514/A Header J0410

Tag O in the baseboard illustration shows the location of the 8514/A header J0410, and the following table lists its pinout.

Pin #	Signal	Pin #	Signal
1	Ground	2	Pixel data 0
3	Ground	4	Pixel data 1
5	Ground	6	Pixel data 2
7	Enable external pixel data	8	Pixel data 3
9	Enable external sync	10	Pixel data 4
11	Enable external pixel clock	12	Pixel data 5
13	Not connected	14	Pixel data 6
15	Ground	16	Pixel data 7
17	Ground	18	Pixel clock
19	Ground	20	Blanking
21	Ground	22	Horizontal sync

23	Not connected	24	Vertical sync
25	Key (pin missing)	26	Ground

Memory Module Connector J0520

Tag P in the baseboard illustration shows the location of the memory module connector J0520, and the following table lists its pinout.

Pin #	Signal	Pin #	Signal
1	Hard reset	2	Ground
3	Reserved	4	Reserved
5	Reserved	6	64 bit operation
7	+5 V	8	Reserved
9	Correctable ECC error	10	Disable ECC
11	Error	12	Force parity error on writes
13	Partition select 1	14	Ground
15	Partition select 3	16	Remap
17	Remapping address 17	18	Memory bus access
19	+5 V	20	Partition select 0
21	Remapping address 18	22	Partition select 2
23	Remapping address 19	24	Write protect
25	Memory speed 0	26	Ground
27	Memory speed 1	28	Memory cache enable
29	Lock	30	Response 0
31	+5 V	32	Response 1
33	Status 0	34	Ready
35	Status 1	36	Reserved
37	Status 2	38	Ground
39	Ground	40	Address strobe
41	CAS latch even	42	Ground
43	CAS latch odd	44	Odd memory bank select
45	Ground	46	Even memory bank select
47	Byte enable 1	48	Ground
49	Byte enable 3	50	Byte enable 0
51	Address bit 3	52	Byte enable 2
53	Address bit 5	54	+5 V
55	+5 V	56	Address bit 2
57	Address bit 7	58	Address bit 4
59	Address bit 9	60	Address bit 6
61	Address bit 11	62	Ground
63	Address bit 13	64	Address bit 8
65	+5 V	66	Address bit 10
67	Address bit 15	68	+5 V
69	Address bit 17	70	Address bit 12
71	Ground	72	Address bit 14
73	Address bit 19	74	Address bit 16
75	Address bit 21	76	Address bit 18
77	Address bit 23	78	+5 V
79	+5 V	80	Address bit 20
81	Address bit 25	82	Address bit 22
83	Address bit 27	84	Address bit 24
85	Ground	86	Address bit 26
87	Address bit 29	88	Ground
89	Address bit 31	90	Address bit 28
91	Ground	92	Address bit 30
93	Data bit 1	94	Ground
95	Ground	96	Data bit 0
97	Data bit 3	98	Data bit 2
99	Data bit 5	100	Data bit 4
101	Data bit 7	102	+5 V
103	Data bit 9	104	Data bit 6
105	Data bit 11	106	Data bit 8
107	Ground	108	Data bit 10
109	Data bit 13	110	Data bit 12
111	Data bit 15	112	Data bit 14
113	Data bit 17	114	+5 V
115	Data bit 19	116	Data bit 16
117	Data bit 21	118	Data bit 18
119	Ground	120	Data bit 20
121	Data bit 23	122	Data bit 22
123	Data bit 25	124	Data bit 24
125	Data bit 27	126	+5 V
127	Data bit 29	128	Data bit 26
129	Data bit 31	130	Data bit 28
131	Ground	132	Data bit 30

CPU Module Connector J0730

Tag Q in the baseboard illustration shows the location of the CPU module main connector J0730, and the following table lists its pinout. (Tag A in the baseboard illustration shows the location of the CPU module power and ground connector J0710. Tag I shows the location of the CPU module power and ground connector J0770.)

Pin #	Signal	Pin #	Signal
1	Hard reset	2	Ground
3	Bus grant	4	Soft reset
5	Bus request	6	64 bit operation
7	+5 V	8	Refresh request
9	Allow 20 mask	10	Refresh demand
11	Memory bus access	12	Reset numeric processor exception error
13	Cache flush	14	Ground
15	Write modified cache entries	16	Interrupt request 13
17	Maskable interrupt	18	Nonmaskable interrupt
19	+5 V	20	Cache data modified
21	Snoop status available	22	Snoop strobe
23	Write through / write back	24	Write protect
25	Memory speed 0	26	Ground
27	Memory speed 1	28	Memory area cacheable
29	Lock	30	Response 0
31	+5 V	32	Response 1
33	Status 0	34	Ready
35	Status 1	36	Force access termination
37	Status 2	38	Ground
39	Ground	40	Address strobe
41	CAS latch even	42	Ground
43	CAS latch odd	44	Odd memory bank select
45	Ground	46	Even memory bank select
47	Byte enable 1	48	Ground

49	Byte enable 3	50	Byte enable 0
51	Address bit 3	52	Byte enable 2
53	Address bit 5	54	+5 V
55	+5 V	56	Address bit 2
57	Address bit 7	58	Address bit 4
59	Address bit 9	60	Address bit 6
61	Address bit 11	62	Ground
63	Address bit 13	64	Address bit 8
65	+5 V	66	Address bit 10
67	Address bit 15	68	+5 V
69	Address bit 17	70	Address bit 12
71	Ground	72	Address bit 14
73	Address bit 19	74	Address bit 16
75	Address bit 21	76	Address bit 18
77	Address bit 23	78	+5 V
79	+5 V	80	Address bit 20
81	Address bit 25	82	Address bit 22
83	Address bit 27	84	Address bit 24
85	Ground	86	Address bit 26
87	Address bit 29	88	Ground
89	Address bit 31	90	Address bit 28
91	Ground	92	Address bit 30
93	Data bit 1	94	Ground
95	Ground	96	Data bit 0
97	Data bit 3	98	Data bit 2
99	Data bit 5	100	Data bit 4
101	Data bit 7	102	+5 V
103	Data bit 9	104	Data bit 6
105	Data bit 11	106	Data bit 8
107	Ground	108	Data bit 10
109	Data bit 13	110	Data bit 12
111	Data bit 15	112	Data bit 14
113	Data bit 17	114	+5 V
115	Data bit 19	116	Data bit 16
117	Data bit 21	118	Data bit 18
119	Ground	120	Data bit 20
121	Data bit 23	122	Data bit 22
123	Data bit 25	124	Data bit 24
125	Data bit 27	126	+5 V
127	Data bit 29	128	Data bit 26
129	Data bit 31	130	Data bit 28
131	Ground	132	Data bit 30

Parallel Connector J0600 (Top)

Tag R in the baseboard illustration shows the location of the two-tiered connector J0600. The top tier is the parallel connector, and the bottom tier is the video connector. The following table lists the pinout for the parallel connector, and the illustration shows the connector.

Pin #	Signal	Pin #	Signal
1	Strobe	10	Acknowledge
2	Data bit 0	11	Busy
3	Data bit 1	12	Paper end
4	Data bit 2	13	Select
5	Data bit 3	14	Auto feed
6	Data bit 4	15	Error
7	Data bit 5	16	Initialize printer
8	Data bit 6	17	Select input
9	Data bit 7	18 - 25	Ground

OM00933A

Video Connector J0600 (Bottom)

Tag R in the baseboard illustration shows the location of the two-tiered connector J0600. The bottom tier is the video connector, and the top tier is the parallel connector. The following table lists the pinout for the video connector, and the illustration shows the connector.

Pin #	Signal	Pin #	Signal
1	Red	10	Ground
2	Green	11 - 12	Not connected
3	Blue	13	Horizontal sync
4	Not connected	14	Vertical sync
5 - 8	Ground	15	Not connected
9	Not connected		

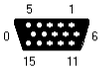

OM00936A

Serial Connectors J0700

Tag S in the baseboard illustration shows the location of the two-tiered serial connector J0700. The top tier is COM1, and the bottom tier is COM2. The following table lists the pinout for these identical connectors. The illustration shows a serial connector.

Pin #	Signal	Pin #	Signal
1	Data carrier detect	6	Data set ready
2	Receive data	7	Request to send
3	Transmit data	8	Clear to send
4	Data terminal ready	9	Ring indicator

5	Ground

OM00992A

Keyboard and Mouse Connectors J0800

Tag T in the baseboard illustration shows the location of the two-tiered connector J0800. The top tier is the mouse connector, and the bottom tier is the keyboard connector. The following table lists their identical pinouts. The illustration shows a connector.

Pin #	Signal	Pin #	Signal
1	Data	4	+5 V (fused)
2	Not connected	5	Clock
3	Ground	6	Not connected

OM00951A

3.5-inch, Diskette Drive

The table lists the electrical requirements for the 1.44 MB, 3.5-inch diskette drive.

Attribute	Specification
Voltage range	+5 V (-6%, +10%)
Ripple	100 mV peak-to-peak max
Operating mode	
Stand-by	7.0 mA typical, 9.0 mA max
Read	0.28 A typical, 0.40 A max
Write	0.34 A typical, 0.46 A max
3 ms seek	0.52 A typical, 0.66 A max
6 ms seek	0.66 A typical, 0.80 A max
Motor start	0.66 A typical, 0.80 A max

Introduction

You can configure your X-series deskside/LX system by using one of the following methods:

- the system BIOS Setup Utility, which is stored in both the flash memory and the batterybacked memory of the real-time clock (RTC)
- the EISA Configuration Utility (ECU) on the System Configuration Disk which was shipped with the system

If your system does not have a diskette drive or it is disabled, use Setup to configure your system. Otherwise, use the ECU to configure it. The information you enter using the ECU overrides any entered using Setup.

If your diskette drive is disabled or improperly configured, you must use Setup to enable it so that you can use the ECU. If necessary, you can disable the drive after you exit the ECU.

Turning on Your System

Use the following procedure to turn on your system:

1. Make sure all external devices, such as a video display monitor, keyboard, and mouse, have been connected.
2. Remove drive protection cards (if present) from the diskette drive(s) and tape drive (if installed).
3. Before you connect the AC power cord to the system, make sure that the line voltage selector switch on the back panel is set to the correct line source voltage (see your product guide).
4. Make sure that the power cord is connected to the AC power input socket on the back of the system.
5. Make sure that the male connector of the power cord is plugged into a grounded AC electrical outlet. Refer to your product guide.
6. Turn on the video display monitor.
7. Turn on your system by pressing the power on/off push-button switch on the front panel (see your product guide).
8. Verify that the power indicator light on the front panel is lit (see your product guide).
9. After a few seconds your system begins a power-on self test. (POST).

Power-on Self-Test

Each time you turn on the X-series system, the power-on self-test (POST) runs automatically and checks the system baseboard, CPU module, memory, keyboard, and most installed peripheral devices.

During the memory test, POST displays the amount of memory that it was able to access and test. Depending on the amount of memory installed, it may take several minutes to complete the memory test. If you do not want to wait for the memory test to complete, you can terminate it after it starts by pressing [Spacebar]. After a soft boot ([Ctrl] + [Alt] + [Del]), POST does not test the memory. Depending on your system configuration, you may or may not see the following message on your video display monitor:

Press Spacebar to Abort Memory Test

Whether or not the above message appears on your video display monitor, the [Spacebar] remains active.

When POST reaches countdown number 135, the system beeps twice and, depending on your system configuration, may or may not display a message similar to the following:

To continue press:.....Spacebar
To configure system press:.....F1

If you do not press the spacebar or [F1], the above message remains for a few seconds, the system beeps once, and then the boot process continues. The [Spacebar] and [F1] remain active whether or not the above message appears on your monitor.

If the system halts before POST completes running, it will emit a beep code indicating a fatal system error that requires immediate attention. For a listing of beep codes and error messages that POST can generate, refer to "Error and Informational Messages."

Running Setup

The Setup utility, located in flash memory on the system baseboard, enables you to check or change the baseboard configuration information. It does not allow you to enter or change information about EISA add-in boards. Setup stores most of the configuration values in the battery-backed memory of the real-time clock (RTC); the rest of the values are stored in the flash EPROM. The values take effect when you boot up the system. POST. checks the values against the actual hardware configuration; if they do not agree, it generates an error message. You must then run Setup to specify the correct configuration.

You can run the Setup utility with or without an operating system being present.

Setup displays four pages of configuration fields: Setup Page 1, Setup Page 2, Setup Page 3, and Setup Page 4. To move from one Setup page to another, press [Pg Up] or [Pg Dn]. To select a field, use [Up] or [Down] to move the cursor to the field; the cursor moves only to the fields that you can change. Use [+] or [-] to change the value of the selected field. Each time you press [+] or [-], Setup displays one of the possible values of the field.

To save the configuration information and reboot the system so that the changes take effect, press [Esc] and then [F4].

Since values entered using the Setup utility are overwritten when you run the EISA Configuration Utility (ECU), you should only run Setup under the following conditions:

- To enable your diskette drive
- If you do not have access to a diskette drive
- If you have installed only ISA expansion boards in your system

Setup Page 1

This section describes the configuration fields displayed on Setup page 1. The default value for each field is in **boldface** type. Press [Pg Up] or [Pg Dn] until the page appears.

Related Topics:

- **System Time**
- **System Date**
- **Onboard Floppy**
- **Diskette A**
- **Diskette B**
- **Onboard IDE**
- **Hard Drive 1**
- **Hard Drive 2**
- **Onboard SCSI**
- **SCSI BIOS Mapping**
- **User Definable Drives**

System Time

The System Time field contains three option fields: hours, minutes, and seconds. Use [up] or [down] to highlight the field that you want to change, and then press [+] or [-] to change it (the seconds field only resets to 0). If you hold down [+] or [-], the value changes continuously. The new time takes effect immediately; you don't have to reboot the system.

System Date

The System Date field contains three option fields: day of the month, month, and year. Use [up] or [down] to highlight the field that you want to change, and then press [+] or [-] to change it. The new date takes effect immediately; you don't have to reboot the system.

Onboard Floppy

The Onboard Floppy field lets you enable or disable the onboard diskette drive controller. Select Enabled if you are using the onboard controller to control the diskette drive. If you select Disabled, then interrupt (IRQ 6) is available for an addin board to use. Use [up] or [down] to highlight the field, and then press [+] or [-] to change it. The options include:

- **Enabled**
- Disabled

For additional security, you can disable writing to the diskette drive with the floppy protection jumper. Refer to "Floppy Protection Jumper E0291"

Diskette A

Use [up] or [down] to highlight the Diskette A field, and then press [+] or [-] to change to the appropriate diskette type. The options include:

- 5.25", 360 KB
- 5.25", 1.2 MB
- 3.5", 720 KB
- **3.5", 1.44 MB**
- 3.5", 2.88 MB
- Not Installed

Note: The media detection code signals may be grounded by some diskette drive types. If so, you may need to install a different signal cable from the system baseboard to the diskette drive.

Diskette B

Use [up] or [down] to highlight the Diskette B field, and then press [+] or [-] to change to the appropriate diskette type. The options include:

- 5.25", 360 KB
- 5.25", 1.2 MB
- 3.5", 720 KB
- 3.5", 1.44 MB
- 3.5", 2.88 MB
- **Not Installed**

Onboard IDE

The Onboard IDE field lets you enable or disable the onboard IDE controller. Enable the field if you are using an IDE hard disk drive in an internal drive bay. If you disable the field, then the IDE disk hardware interrupt (IRQ 14) is available for an addin board to use. Use [up] or [down] to highlight the field, and then press [+] or [-] to change it. The options include:

- Enabled
- **Disabled**

Hard Drive 1

The Hard Drive 1 field lets you specify the drive type for hard disk drive C.

CAUTION: You must specify the correct hard disk drive type, because the system BIOS cannot independently verify this information. The system BIOS will not recognize the installed hard disk drive if the drive type is incorrect.

Note: We do not recommend mounting a hard disk drive in a 5.25-inch external peripheral bay because the drive may generate EMI. In addition, its susceptibility to ESD increases in the external bay.

Contact your sales representative or dealer for a list of approved add-in peripheral devices.

Select "Not Installed" if a SCSI hard disk drive is installed or if no hard disk drive is installed. If only one drive is installed, it will always be Hard Drive 1. In this case, select "Not Installed" for Hard Drive.

For information about the drive type, refer to the manufacturer's documentation packaged with the drive. Some manufacturers provide the drive parameters rather than the drive type.

If you know the drive type, use [up] or [down] to highlight the Hard Drive 1 field, and then press [+] or [-] until your drive type appears on the screen. For each drive type, the drive parameters also appear on the screen. The options include:

- **Not Installed**
- Type 1

  through
- Type 47

If you have only the drive parameters, try to match them by stepping through the drive types and checking the displayed parameters for each type. If there is no match, select one of the user-definable drive types (2 and 3 or 48 and 49) to specify your drive's parameters. See "User Definable Drives."

Hard Drive 2

The Hard Drive 2 field lets you specify the drive type for hard disk drive D. The options are the same as those listed for hard drive.

Onboard SCSI

Depending on the model, the X-series deskside/LX system baseboard contains an onboard Adaptec AIC-7770, 32-bit dual channel SCSI controller. Enable H/W Only if the system does not boot up from a SCSI device connected to the embedded onboard SCSI controller, such as when you have only SCSI tape drives or CDROM drives installed; in this case, the SCSI drivers must be installed after running Setup. Enable H/W & BIOS if the system boots up from a SCSI device. Disable the Onboard SCSI field if you do not have SCSI devices connected to the system. Use [up] or [down] to highlight the field, and then press [+] or [-] to change it. The options include:

- **Disabled**
- H/W Only
- H/W & BIOS

SCSI, when enabled, uses hardware interrupt 11 by default. When SCSI is disabled, interrupt 11 is available. Use the ECU to edit the interrupts.

The Onboard SCSI field refers only to the SCSI controller, not the installed SCSI devices. To fully enable the Onboard SCSI field, you must run the ECU. See "Running the EISA Configuration Utility."

Note: If the onboard SCSI BIOS is enabled, it must not conflict with another system BIOS; for example, if the video BIOS is at E0000H, then the SCSI BIOS must be at a different address.

Run EZ-SCSI to install SCSI devices in your system when you are using DOS as your operating system. For information about running EZ-SCSI, see your *X-Series SCSI Software User's Guide for the AIC-7770*.

SCSI BIOS Mapping

If the onboard SCSI BIOS is enabled, it must not conflict with the onboard video BIOS; for example, if the onboard video BIOS3B8A0M4 is at E0000H, then the SCSI BIOS must be at a different address. Enabling the onboard SCSI BIOS in Setup assigns it to interrupt 11. Use [up] or [down] to highlight the field, and then press [+] or [-] to change it. The options include:

- **C0000H**
- C8000H
- E0000H
- EC000H

User Definable Drives

The User Definable Drives field allows you to enable the user-definable drive types 2 and 3 or 48 and 49. Select 48 and 49 unless there is a conflict with your network; if there is, select 2 and 3. Use [up] or [down] to highlight the field, and then press [+] or [-] to change it. The options include:

- **2 and 3**

- 48 and 49

After you select one of the user-definable drive types, press [up] to highlight the drive parameter fields. Enter the parameters supplied by the manufacturer.

Setup Page 2

This section describes the configuration fields displayed on Setup page 2. The default value for each field is in **boldface** type. Press [Pg Up] or [Pg Dn] until the page appears.

Related Topics:

Video Type
640 x 480 Mode Refresh Rate
800 x 600 Mode Refresh Rate
1024 x 768 Mode Refresh Rate
Video Font
Onboard Video Controller1
Offboard VGA/EGA Adapter Installed
Keyboard
NumLock on at Boot
Password
POST Memory Test Prompt
POST Setup Prompt
Boot Device Select

Video Type

The Video Type field lets you specify the onboard video display type. If you have installed an add-in video controller board, select the option that describes it. Use [up] or [down] to highlight the field, and then press [+] or [-] to change it. The options include:

- **VGA/EGA**
- CGA40
- CGA80
- MDA
- Not Installed

When you select the Not Installed option, the display type will be configured for VGA.

The 640 x 480 Mode Refresh Rate field lets you select the appropriate refresh rate for your video display monitor. A higher refresh rate means less vertical flicker, and therefore less eyestrain. The refresh rate you choose depends on the monitor type you select when you configure your system. This feature is valid only when the onboard video is used. Use [up] or [down] to highlight the field, and then press [+] or [-] to change it. The options include:

- **60 Hz**
- 75 Hz
- x2, x16 @ 72 Hz

CAUTION: It is possible to damage your monitor if you use the incorrect refresh rate. Check the documentation that came with your monitor to determine the proper setting.

800 x 600 Mode Refresh Rate

The 800 x 600 Mode Refresh Rate field lets you select the appropriate refresh rate for your video display monitor. A higher refresh rate means less vertical flicker, and therefore less eyestrain. The refresh rate you choose depends on the monitor type you select when you configure your system. This feature is valid only when the onboard video is used. Use [up] or [down] to highlight the field, and then press [+] or [-] to change it. The options include:

- **56 Hz**
- 60 Hz
- 72 Hz

CAUTION: It is possible to damage your monitor if you use the incorrect refresh rate. Check the documentation that came with your monitor to determine the proper setting.

1024 x 768 Mode Refresh Rate

The 1024 x 768 Mode Refresh Rate field lets you select the appropriate refresh rate for your video display monitor. A higher refresh rate means less vertical flicker, and therefore less eyestrain. The refresh rate you choose depends on the monitor type you select when you configure your system. This feature is valid only when the onboard video is used. Use [up] or [down] to highlight the field, and then press [+] or [-] to change it. The options include:

- **Interlaced @ 44/88 Hz**
- Non-Interlaced @ 60 Hz
- Non-Interlaced @ 70 Hz
- Non-Interlaced @ 72 Hz

CAUTION: It is possible to damage your monitor if you use the incorrect refresh rate. Check the documentation that came with your monitor to determine the proper setting.

Video Font

The Video Font field lets you select video character font dimensions. The 9 x 16 font is recommended for general use with VGA and most application and utility programs. Use [up] or [down] to highlight the field, and then press [+] or [-] to change it. The options include:

- **9 x 16**
- 8 x 16

Onboard Video Controller

In a two-monitor system, the Onboard Video Controller field lets you select the appropriate option according to whether the video display monitor connected to the onboard video controller is the primary or the secondary monitor. All BIOS video writes are directed to the primary video display monitor. This feature is valid only when the onboard video is used. Use [up] or [down] to highlight the field, and then press [+] or [-] to change it. The options include:

- **Primary**
- Secondary

The super VGA controller on the system baseboard is a Western Digital WD90C31.

Offboard VGA/EGA Adapter Installed

The Offboard VGA/EGA Adapter Installed field allows you to indicate whether there is an offboard video BIOS at C0000H or not. If you install a VGA/EGA adapter board in your system, select "Yes" so that the offboard video BIOS will be initialized during the video initialization phase early in POST. Use [up] or [down] to highlight the field, and then press [+] or [-] to change it. The options include:

- **No**
- Yes

The options for the Offboard VGA/EGA Adapter Installed field do not affect the onboard video controller. To disable it, refer to procedure "VGA Jumper E0290."

Keyboard

The Keyboard field lets you enable or disable error reporting for the keyboard. If you are going to operate your system without a keyboard, select "Not Installed" so that POST will not report the absence of the keyboard as an error: for example, as a network server. If you use a keyboard with the field set to "Not Installed," it will function normally as when running Setup. Use [up] or [down] to highlight the field, and then press [+] or [-] to change it. The options include:

- **Not Installed**
- Installed

Regardless of whether or not you select either "Installed" or "Not Installed," the system does not wait indefinitely for input from the keyboard.

NumLock on at Boot

The NumLock field lets you enable or disable the "Num Lock" key after the system boots up. If you change the value of the field, your system will boot up the next time with the value you chose. Use [up] or [down] to highlight the field, and then press [+] or [-] to change it. The options include:

- **No**
- Yes

Password

The Password field permits you to install a password. If you install one, it must be entered when you power up the system or the system will not boot. Use [up] or [down] to highlight the field.

- **Not installed**

To install a password, press [+] or [-] and follow the instructions displayed on the screen. After you install a password, the Password field switches to "Installed." The next time you reboot the system, it will prompt you for the password.

To change the password, boot up the system and enter the following at the prompt:

Enter Password: oldpassword/newpassword/newpassword

To remove the password, boot up the system and enter the following at the prompt:

Enter Password: password/

To disable the password facility, set the password jumper to "Off" on the system baseboard. Refer to "Password Jumper E0390."

POST Memory Test Prompt

The POST Memory Test Prompt field lets you enable or disable the memory test prompt. Use [up] or [down] to highlight the field, and then press [+] or [-] to change it. The options include:

- **Enabled**

- Disabled

When the field is enabled, the following message appears on the video display monitor during the memory test:

Press Spacebar to Abort Memory Test

POST Setup Prompt

The POST Setup Prompt field lets you enable or disable the setup prompt. Use [up] or [down] to highlight the field, and then press [+] or [-] to change it. The options include:

- **Enabled**
- Disabled

If the field is enabled, the following message appears on the video display monitor when POST reaches countdown number 135:

To continue press:.....Spacebar
To configure system press:.....F1

If the field is disabled, the above message will not appear on the video display monitor. However, when POST reaches countdown number 135, it pauses for a few seconds so that you can press either the [Spacebar] or [F1].

Whether or not the above message appears on your video display monitor, the [Spacebar] and [F1] remain active.

Boot Device Select

The Boot Device Select field lets you select the device you would like to use to boot your system . Use [up] or [down] to highlight the field, and then press [+] or [-] to change it. The options include:

- **Diskette or Hard Drive**
- Hard Drive Only

Setup Page 3

This section describes the configuration fields displayed on Setup page 3. The default value for each field is in **boldface** type. Press [Pg Up] or [Pg Dn] until the page appears.

Related Topics:

Base Memory
Extended Memory
Base Memory Above 512
Speaker
LCD
Onboard Mouse
Parallel Port
Serial Port 1
Serial Port 2
Console Redirection to COM 1
Console Redirection to COM 2

Base Memory

The Base Memory field displays the size of the base memory in KB. You cannot change this field with Setup; it is determined during the power-up sequence. The size will be either 512K or 640K unless there is a failure in the base memory.

Extended Memory

The Extended Memory field displays the amount of memory detected above 1 MB in the system. The memory includes 80 ns, fast page SIMMs with tin-lead alloy plated edge connectors on the system board, and memory on the memory module and EISA add-in boards. You cannot change this field through Setup; it is determined during the power-up sequence.

Base Memory Above 512K

The Base Memory Above 512K field lets you enable or disable the base memory from 512K to 640K. If you enable the field, then the memory addresses from 512K to 640K are assigned to memory on the system board. Choose Disabled if you have an add-in board that uses the memory addresses from 512K to 640K. Use [up] or [down] to highlight the field, and then press [+] or [-] to change it. The options include:

- **Enabled**
- Disabled

Note: Depending on the version of your system baseboard, this option cannot be disabled with Setup. Pressing [+] or [-] will cause this message to appear on the screen: "This option not available."

Speaker

The Speaker field lets you enable or disable the speaker. When the speaker is disabled with the Setup utility, application software cannot enable it; it must be enabled with Setup. Use [up] or [down] to highlight the field, and then press [+] or [-] to change it. The options include:

- **Enabled**
- Disabled

LCD

Use [up] or [down] to highlight the LCD (Liquid Crystal Display) field, and then press [+] or [-] to change it. Even though the BIOS default is "Enabled," you should select "Disabled" because your X-series deskside/LX system does not contain an LCD. The options include:

- **Enabled**
- Disabled

Onboard Mouse

The Onboard Mouse field lets you enable or disable the onboard mouse interrupt. Enable the field if you are using the onboard mouse port. If you disable the field, then the mouse hardware interrupt (IRQ 12) is available for an addin board to use. Use [up] or [down] to highlight the field, and then press [+] or [-] to change it. The options include:

- **Enabled**
- Disabled

Parallel Port

The Parallel Port field lets you choose how the port functions. Select one of the compatible options if you want the port to function as a parallel port on the IBM PC AT. Select one of the bidirectional options if you want the port to function as a parallel port on the IBM PS/2. Choose a base address that is different from the base address of any other parallel port installed in the system. Use [up] or [down] to highlight the field, and then press [+] or [-] to change it. The options include:

- **Address 378H: Compatible/IRQ7**
- Address 278H: Compatible/IRQ7
- Address 378H: Bi-directional/IRQ7
- Address 278H: Bi-directional/IRQ7
- Disabled

Address 378H is for parallel printer port LPT1 and 278H is for LPT2.

Serial Port 1

The Serial Port 1 field lets you disable or select the address and interrupt for serial port 1. Use [up] or [down] to highlight the field, and then press [+] or [-] to change it. The options include:

- **Address 3F8H/IRQ4**
- Address 2F8H/IRQ3
- Address 3E8H/IRQ10
- Disabled

Setup will not allow you to select the same address and interrupt that is used by Serial Port 2

Address 3F8H is for serial communication port COM 1, 2F8H is for COM 2, and 3E8H is for COM 3.

Serial Port 2

The Serial Port 2 field lets you disable or select the address and interrupt for serial port 2. Use [up] or [down] to highlight the field, and then press [+] or [-] to change it. The options include:

- **Address 2F8H/IRQ3**
- Address 3E8H/IRQ10
- Address 2E8H/IRQ11
- Disabled

Setup will not allow you to select the same address and interrupt that is used by Serial Port 1.

Address 2F8H is for serial communication port COM 2, 3E8H is for COM 3, and 2E8H is for COM 4.

Console Redirection to COM 1

The Console Redirection to COM 1 field lets you enable redirection at the appropriate speed to copy the system input and output to serial port 1. Select Disabled if console redirection is not in use since it affects overall performance. Use [up] or [down] to highlight the field, and then press [+] or [-] to change it. The options include:

- **Disabled**
- 1200 Baud
- 2400 Baud
- 9600 Baud

If you do not intend to use console redirection, be sure that it is disabled; if it is left enabled, it will degrade your system's performance.

Console Redirection to COM 2

The Console Redirection to COM 2 field lets you enable redirection at the appropriate speed to copy the system input and output to serial port 2. Select Disabled if console redirection is not in use since it affects overall performance. Use [up] or [down] to highlight the field, and then press [+] or [-] to change it. The options include:

- **Disabled**

- 1200 Baud
- 2400 Baud
- 9600 Baud

If you do not intend to use console redirection, be sure that it is disabled; if it is left enabled, it will degrade your system's performance.

Setup Page 4

This section describes the configuration fields displayed on Setup page 4. The default value for each field is in **boldface** type. Press [Pg Up] or [Pg Dn] until the page appears.

Related Topics:

CPU Speed
Cache
I/O Recovery Time
Posted I/O Writes
Concurrent Refresh
Onboard Video BIOS Mapping
Shadow C0000 to C7FFF
Shadow C8000 to CFFFF
Shadow E0000 to E7FFF
Scan Flash User Area
Exiting Setup

CPU Speed

The CPU Speed field lets you change the operating speed of the CPU. With the field set to Fast, the CPU runs at its full rated speed. With it set to Slow, the internal cache and any secondary cache are disabled and the system effectively runs like an 8 MHz IBM PC AT system. If a software application does not run correctly with CPU Speed set to Fast, try setting it to Slow. Some older applications and copy-protection software may require the Slow setting. Use [up] or [down] to highlight the field, and then press [+] or [-] to change it. The options include:

- **Fast**
- Slow

You can change the CPU speed during run time. For more information about changing the speed, see "Hot Keys."

Cache

Use the Cache field to enable or disable cache (both the internal cache of the CPU and the external cache module, if installed). Certain CPU modules support cache in the write-back mode. Enabling cache in the writeback mode causes it to perform faster. Enabling cache as write back on a CPU module that supports only write through causes the module to enable its cache in the writethrough mode. Disabling cache results in system performance degradation. You may want to disable the cache when you are using timing-loopdependent software. Use [up] or [down] to highlight the field, and then press [+] or [-] to change it. The options include:

- **Disabled**
- Write through
- Write back

I/O Recovery Time

Selecting Enhanced from the I/O Recovery Time field causes a fast I/O recovery time. If you experience problems (especially memory parity errors or poor video add-in board performance), then try Standard; the I/O recovery time is slower. The hardware guarantees system bus clocks (BCLKs) between I/O cycles as shown below:

I/O Recovery	8 Bit	16 Bit
Standard	11 BCLKs	3 BCLKs
Enhanced	6 BCLKs	2 BCLKs

The duration of one BCLK cycle is 120 ns at 8.33 MHz. Use [up] or [down] to highlight the field, and then press [+] or [-] to change it. The options include:

- **Enhanced**
- Standard

Posted I/O Writes

Selecting Enabled from the Posted I/O Writes field causes posted I/O writes to be executed which gives higher system performance. Setting the Posted I/O Writes field to enabled causes all memory write cycles and I/O write cycles to certain I/O addresses to be posted. The CPU module executes a successive cycle on the system bus while the write cycle is completing on the EISA/ISA bus. A successive cycle to the EISA/ISA bus gets delayed until the posted cycle completes. Setting the Posted I/O Writes field to disabled disables posting of memory write cycles and I/O write cycles. Write cycles to the following I/O address ranges are never posted: 0000H-00FFH, 0400H-04FFH, 0800H-08FFH, and 0C00H-0CFFH.

Use [up] or [down] to highlight the field, and then press [+] or [-] to change it. The options include:

- **Standard**
- Fast
- Disabled

Concurrent Refresh

Selecting Enabled from the Concurrent Refresh field causes concurrent refresh cycles to be performed. The CPU then executes out of cache or onboard memory while the EISA bus is being refreshed concurrently giving higher system performance. The maximum refresh cycle duration during a concurrent refresh is 125 ns. If EISA and onboard memory are coupled (a nonconcurrent refresh), then the refresh cycle duration is 1.2 ms. The CPU cannot execute until the EISA bus refresh cycle completes.

Use [up] or [down] to highlight the field, and then press [+] or [-] to change it. The options include:

- **Enabled**
- Disabled

Onboard Video BIOS Mapping

The Onboard Video BIOS Mapping field allows you to locate the video BIOS at E000:0000H - E000:7FFFH or C000:0000H - C000:7FFFH. Some applications require locating the video BIOS in segment C000 for compatibility. Selecting "To E0000H" maps C000:0000H - C000:7FFFH to the EISA/ISA bus. Selecting "To C0000H" maps E000:0000H - E000:7FFFH to the EISA/ISA bus. Use [up] or [down] to highlight the field, and then press [+] or [-] to change it. The options include:

- **To E0000H**
- To C0000H

If the onboard SCSI BIOS. is enabled, it must not conflict with the onboard video BIOS; for example, if the video BIOS is at E0000H, then the SCSI BIOS must be at C0000H. Enabling the onboard SCSI BIOS in Setup assigns it to interrupt 11.

Shadow C0000 to C7FFF

The Shadow C0000 to C7FFF field lets you enable or disable shadowing of area C000:0000H to C000:7FFFH. Shadowing memory increases performance by copying slow ROM into fast RAM. However, some BIOS code does not function correctly when it is shadowed. Use [up] or [down] to highlight the field, and then press [+] or [-] to change it. The options include:

- **Disabled**
- Enabled

Shadow C8000 to CFFFF

The Shadow C8000 to CFFFF field lets you enable or disable shadowing of area C000:8000H to C000:FFFFH. Shadowing memory increases performance by copying slow ROM into fast RAM. However, some BIOS code does not function correctly when it is shadowed. Use [up] or [down] to highlight the field, and then press [+] or [-] to change it. The options include:

- **Disabled**
- Enabled

Shadow E0000 to E7FFF

The Shadow E0000 to E7FFF field lets you enable or disable shadowing of area E000:0000H to E000:7FFFH (usually this is for the onboard video BIOS3B8A0M4 and is already enabled). Shadowing memory increases performance by copying slow ROM into fast RAM. However, some BIOS code does not function correctly when it is shadowed. Use [up] or [down] to highlight the field, and then press [+] or [-] to change it. The options include:

- **Disabled**
- Enabled

Scan Flash User Area

The Scan Flash User Area field lets you enable or disable scanning of the 8K block (EA000H to EBFFFH) of flash user area memory in the BIOS prior to boot. If you have installed code in the user area, selecting Enabled allows the BIOS to make a call to the area and run your code. Use [up] or [down] to highlight the field, and then press [+] or [-] to change it. The options include:

- **Disabled**
- Enabled

Exiting Setup

After changing the Setup configuration information, press [Esc] to display the "Exiting Setup" menu. To save your changes and reboot the system, press [F4]. If you want to load the default options for all pages, press [F5]. If you want to exit Setup without saving your changes, press [F6].

Running the EISA Configuration Utility

If you install EISA add-in boards or add extended memory to the system, you must run the EISA Configuration Utility (ECU). This utility is on the System Configuration Disk. shipped with your system.

To operate properly, the X-series deskside/LX system needs information about the configuration of any EISA add-in boards that you have installed. The information is then stored in the nonvolatile flash memory. Use the ECU to specify and store configuration information about EISA add-in boards.

When you exit the ECU, it will update Setup configuration information stored in the battery-backed memory of the Real-time Clock (RTC), and the EISA configuration information stored in flash memory.

Note: The flash memory jumper E0190 must be in the default position, "normal boot," before you can run the ECU. Refer to "Flash Memory Jumper E0190."

Each EISA add-in board comes with a diskette that contains a configuration (CFG) file which describes the board's characteristics and the system resources that it requires. The X-series deskside/LX system board also comes with a CFG file. The ECU uses the CFG files and the information that you enter to specify a system configuration. It configures the system by writing the configuration information to flash memory.

You can also use the ECU to create system configuration information (SCI) files to use in configuring other systems. When you configure your system, the ECU automatically creates an SCI file that you can use to restore your system configuration; for example, adding or removing an EISA add-in board.

Related Topics:

Procedure
Hard Disk Group
Hard Drive 1
Hard Drive 2

Procedure

The basic steps in running the EISA Configuration Utility are listed below:

1. Install the EISA add-in boards into your system. For information about installing add-in boards, see your product guide.
2. Turn on the video display monitor.
3. Turn on your system by pressing the power on/off push-button switch on the front panel (see your product guide).
4. Verify that the power indicator light on the front panel is lit (see your product guide).
5. Use Setup to enable the onboard floppy drive controller, to specify the correct type of diskette drive, and to enable or disable console redirection to the COM ports.

   If you are using console redirection, enable console redirection, edit the CONFIG.SYS file on the System Configuration Disk, and add the /M and /B parameters to the "shell=" line; see "Command Line Parameters" for details.
6. Start the ECU by inserting the System Configuration Disk into the diskette drive and rebooting the system. When the ECU appears on your screen, press [Enter] to continue.
7. From the Main Menu, press [up] or [down] to highlight an item and then press [Enter] to select it. If you are using a mouse, point to an item and double-click the left button to select it. When you highlight an item, information about it appears in a popup window.
8. From the Main Menu, select "Learn about configuring your computer" for information about setting up your computer.
9. From the Main Menu, select "Configure computer" to load the configuration files.
10. From the "Steps in configuring your computer" menu, select "Step 3. View or edit details" and follow the steps on the screen. Press [F1] at any time for help.

You can also start the EISA Configuration Utility from drive A by typing **ECU** at the MSDOS prompt and pressing <Enter>. (To speed up the execution of the ECU, copy the System Configuration Disk to a directory on your hard drive and run the it from there.)

Related Topics:

Command Line Parameters

Command Line Parameters

Use the following command line parameters to run the ECU in different modes:

/A Advanced/Dealer mode. Displays advanced menu selections. You can also enter this mode by pressing [Ctrl] + [A] when the "Welcome" screen is displayed on your monitor.

/B BIOS video output. Uses the BIOS video support (interrupt 10H) routines for all video output. Use this parameter on systems with nonstandard video display monitors and when you have redirected the console to one of the onboard serial ports.

/F Automatic configuration mode. Configures the system by auto-adding EISA add-in boards and using valid flash memory for the configuration information. If the flash memory is invalid, the SYSTEM.SCI file will be used to obtain the configuration information.

/H High resolution display. Sets the display mode to 43 lines for an EGA add-in video controller board or 50 lines for a VGA board. The default is 25 lines for all add-in video controller boards.

/K Keyboard only. Prevents the system from supporting a mouse, even when one is present. The default is to support a mouse if a mouse driver is detected.

/M Monochrome display. Shows monitor screens using monochrome attributes, even on a color monitor. The default is to display color, unless a monochrome monitor is detected. Use this parameter when you have redirected the console to one of the onboard serial ports.

/N Modeling mode. Lets you open an existing SCI file or create a new one. If you use this parameter, the configuration is saved to a named SCI file rather than to the flash memory.

/P Permanent command interpreter. Indicates that there is no COMMAND.COM and the ECU is to reboot the system instead of exiting to the operating system. The ECU prompts you to press a key to continue with the reboot.

Hard Disk Group

The hard disk group is listed in "Step 3. View or edit details" in the ECU. You can install four 3.5-inch SCSI hard disk drives in the internal bays near the fan and two IDE or SCSI 3.5-inch hard disk drives in the internal bays near the power supply.

Note: We do not recommend mounting a hard disk drive in a 5.25-inch external peripheral bay because the drive may generate EMI. In addition, its susceptibility to ESD increases in the external bay.

Contact your sales representative or dealer for a list of approved add-in peripheral devices.

Hard Drive 1

The Hard Drive 1 field lets you specify the drive type for hard disk drive C. The options include:

- Hard Disk Auto-Configuration
- Hard Drive 1 Disabled
- Drive Types 1 - 47
- Drive Type 2 or 48 (User-definable)
- Drive Type 3 or 49 (User-definable)

Hard disk drive 1 must be configured to determine drive-specific parameters. If the hard disk drive controller can auto-configure the drive through the ECU, then you should select "Hard Disk Auto-Configuration." SCSI hard disk drives are usually selected as "Hard Drive 1 Disabled." Otherwise, choose the drive type for the drive from types 1 47. If hard drive 1 is not installed, then select "Hard Drive 1 Disabled."

Selecting either "Drive Type 2 or 48" or "Drive Type 3 or 49" requires you to enter specific parameters (cylinders, heads, precompensation, landing zone, and sectors). Some operating systems do not read BIOS drive type parameters above type 47; types 2 and 3 are provided for those operating systems.

Hard Drive 2

The Hard Drive 2 field lets you specify the drive type for hard disk drive D. The options are the same as those listed for hard drive 1.

Other Configuration Utilities

One of the selections from the main menu of the EISA Configuration Utility, "Access System Utilities," lets you set various system passwords and other configuration options. Some of these options are also accessible through Setup.

Related Topics:

Power-on Password
Network Password
Keyboard Password
System Speed
Speaker
Cache

Power-on Password

Selecting "Set Initial Power-on Password" lets you enter a password that you will be prompted for when the system is turned on or rebooted. To enter a password, follow the instructions on the screen. You must enter the password a second time for verification. The power-on password also becomes the keyboard password when the system is turned on or rebooted (see "Network Password").

To change or remove the password, refer to the password part of the Setup utility.

To disable the password facility, set the password jumper to "Off" on the system baseboard. Refer to "Password Jumper E0390."

Network Password

Selecting "Activate Network Password" lets the system boot up, install all specified drivers, and wait for the password to be entered before it will allow access via the keyboard or mouse. The network password is the same as the power-on password that must be installed before the network password can be activated. This scheme enables the system to boot from a network server while retaining password protection for security.

Keyboard Password

Selecting "Set Keyboard Password" lets you enter a password for the keyboard. To enter a password, follow the instructions on the screen. You must enter the password a second time for verification. If one already exists, the utility asks if you want to change it. If yes, the utility prompts you for the old password, the new password, and then the new password again for verification.

After you have installed a keyboard password, you can lock the keyboard by selecting "Lock Keyboard." To unlock the keyboard, type the keyboard password and press [Enter].

To remove the keyboard password, reboot the system. If a power-on password exists, that becomes the keyboard password after the system reboots. There will be no keyboard password if you remove the power-on password and then reboot the system.

System Speed

Selecting "System Speed SLOW" slows the effective system speed to that of an 8 MHz IBM PC AT system for compatibility with certain older software. (In slow mode, all the primary and the secondary cache logic is disabled.) Selecting "System Speed FAST" enables the system to run at the full rated speed of the CPU. When you reboot the system, the system speed will revert to what you specified with the ECU or Setup utility.

Speaker

Selecting either "Speaker ON" or "Speaker OFF" lets you turn the system speaker on or off. When you reboot the system, the state of the speaker will revert to what you specified with the ECU or Setup.

Cache

Selecting either "Cache ON" or "Cache OFF" lets you turn on or off the system's caching capabilities (both the internal cache of the CPU and the external cache, if installed). When you reboot the system, the system caching will revert to what you specified with the ECU or Setup.

Hot Keys

The keyboard controller provides the following hot key sequences. Enter the numbers and symbols enclosed in [ ] by depressing keys on the numeric pad.

[Ctrl] + [Alt] + [Del]	Pressing these keys clears system memory and reloads the operating system. This is a "soft boot" reset.
[Ctrl] + [Alt] + [1]	Depending on your operating system or application software, pressing these keys (1 only on the numeric keypad) sets the system in the slow mode; it emulates an 8 MHz CPU.
[Ctrl] + [Alt] + [2]	Depending on your operating system or application software, pressing these keys (2 only on the numeric keypad) sets the system in the fast mode; it runs at its normal speed of operation.
[Ctrl] + [Alt] + [+]	Depending on your operating system or application software, pressing these keys increases the click sound made when a key is pressed.
[Ctrl] + [Alt] + [-]	Depending on your operating system or application software, pressing these keys decreases the click sound made when a key is pressed.

Installing Video Drivers

After you have configured your X-series deskside/LX system, you may install various video drivers to take full advantage of its onboard super VGA video controller. The system may not operate properly without the video drivers installed. In addition to the MSDOS and Microsoft Windows video drivers supplied with the system, you can obtain UNIX and OS/2 video drivers from your system supplier.

For the most current information on what drivers you need to install for your system's configuration, read the text file README.TXT that is in the root directory of each diskette in the base software kit supplied with the system. To install the drivers from the diskettes, follow the installation instructions in README.TXT.

The diskettes containing the video drivers provide procedures that take full advantage of the onboard Western Digital WD90C31 super VGA controller's enhanced features. To install these video drivers, do the following:

1. Fully configure your system. (This may include video DRAM buffer memory, application software, or new EISA/ISA add-in boards.)
2. Insert disk 1 of the video drivers and utilities for MS-DOS and Windows into drive A.
3. At the DOS command prompt, type `A:install` and press [Enter].
4. Follow the directions on the screen to install the video drivers.

If you are installing a third-party software package, you need to select the Paradise VGA video driver from the package. It will work on your system.

The super VGA controller on the system baseboard is a Western Digital WD90C31.

POST and Boot Error Messages

Select the range that includes your error message number.

Related Topics:

POST and Boot Error Messages 840-740
POST and Boot Error Messages 741-754
POST and Boot Error Messages 755-690
POST and Boot Error Messages 691-650
POST and Boot Error Messages 645-540
POST and Boot Error Messages 520-430
POST and Boot Error Messages 390-330
POST and Boot Error Messages 310-296
POST and Boot Error Messages 297-135
POST and Boot Error Messages 130-121
POST and Boot Error Messages 122-060
POST and Boot Error Messages 040-020
POST and Boot Error Messages 000-004

POST and Boot Error Messages 840-740

Post No.	Error No.	Message	Solution
840		Start of POST.	
830		CPU Register test.	
820		8742 Initialization.	
810		Real time clock RAM and register test.	
	810	RTC RAM and register test failure.	For solutions to messages 810-740, call your service representative.
800		System BIOS checksum test.	
	800	System BIOS checksum test failure.	
790		Initialize programmable interval timer.	
	790	Programmable interval timer failure.	
780		DMA channel test.	
	780	DMA channel failure.	
770		DMA page register test.	
	770	DMA page register test failure.	
760		Verify RAM refresh test.	
	760	RAM refresh failure.	
740		First 64 KB RAM test.	
	740	First 64 KB RAM chip or data line failure-bit 0.	

POST and Boot Error Messages 741-754

Post No.	Error No.	Message	Solution

	741	First 64 KB RAM chip or data line failure-bit 1.	For solutions to messages 741-754, call your service representative.
	742	First 64 KB RAM chip or data line failure-bit 2.	
	743	First 64 KB RAM chip or data line failure-bit 3.	
	744	First 64 KB RAM chip or data line failure-bit 4.	
	745	First 64 KB RAM chip or data line failure-bit 5.	
	746	First 64 KB RAM chip or data line failure-bit 6.	
	747	First 64 KB RAM chip or data line failure-bit 7.	
	748	First 64 KB RAM chip or data line failure-bit 8.	
	749	First 64 KB RAM chip or data line failure-bit 9.	
	750	First 64 KB RAM chip or data line failure-bit 10.	
	751	First 64 KB RAM chip or data line failure-bit 11.	
	752	First 64 KB RAM chip or data line failure-bit 12.	
	753	First 64 KB RAM chip or data line failure-bit 13.	
	754	First 64 KB RAM chip or data line failure-bit 14.	

POST and Boot Error Messages 755-690

Post No.	Error No.	Message	Solution
	755	First 64 KB RAM chip or data line failure-bit 15.	For solutions to messages 755-759, call your service representative.
	756	First 64 KB RAM chip or data line failure-multi-bit.	
	757	First 64 KB odd/even logic failure.	
	758	First 64 KB address line failure.	
	759	First 64 KB RAM parity test failure.	
	700	Shadow of system BIOS failed.	System DRAM failure. Replace defective SIMM.
	701	Shadow of onboard video BIOS failed.	For solutions to messages 701-706, call your service representative.
	702	Off-board video BIOS not found.	
	703	Onboard video BIOS conflict at C0000H.	
	704	Fatal onboard video BIOS conflict at C0000H.	
	705	Onboard video BIOS conflict at E0000H.	
	706	Fatal onboard video BIOS conflict at E0000H.	
690		CMOS checksum test.	
	690	CMOS power failure.	(a) Run the ECU. (b) If problem persists, use jumper E0292 to clear CMOS to factory defaults. (c) If problem persists, check the +12 V jumper to flash; E0721 should be on pins 1 and 2. (d) If problem persists, call your service representative.

POST and Boot Error Messages 691-650

Post No.	Error No.	Message	Solution
	691	CMOS checksum failure.	Solutions for messages 691-693: (a) Run the ECU. (b) If problem persists, use jumper E0292 to clear CMOS to factory defaults. (c) If problem persists, check the +12 V jumper to flash; E0721 should be on pins 1 and 2. (d) If problem persists, call your service representative.
	692	Extended CMOS checksum failure.	
	693	Default configuration failure, unable to write flash memory. (Note that this error will be displayed after video has been initialized.)	
680		Initialize EISA slots.	
670		Initialize serial ports.	
660		Initialize parallel ports.	
655		DMA register test (Slave).	
	655	DMA register failure (Slave).	Call your service representative.
650		DMA register test (Master).	
	650	DMA register failure (Master).	Call your service representative.

POST and Boot Error Messages 645-540

Post No.	Error No.	Message	Solution
645		Programmable interrupt controller register test (Master).	
	645	Programmable interrupt controller register test failure(Master).	Call your service representative.
640		Programmable interrupt controller register test (Slave).	
	640	Programmable interrupt controller register test failure (Slave).	Call your service representative.
620		Initialize interrupt vector table.	
610		Enable timer tick interrupt.	
600		Initialize keyboard controller.	
	600	Keyboard controller failure.	Check the keyboard connection. If the connection is good, the keyboard controller may have failed. If the problem persists, call your service representative.
590		Check video configuration.	
570		Initialize video controller.	
	570	VGA/EGA configuration error.	Solutions for messages 570 and 540: Run the ECU or Setup. If problem persists, call your service representative.
540		Scan and initialize video ROM.	
	540	VGA/EGA BIOS failed to initialize.	

POST and Boot Error Messages 520-430

Post No.	Error No.	Message	Solution
520		Initialize console redirection.	
500		Display sign on message.	
490		Timer tick interrupt test.	
	490	No timer tick interrupt.	For solutions to messages 490-461, call your service representative.
480		Shutdown test.	
	480	Shutdown failure.	
460		EISA extended devices test.	
	460	Fail-safe timer NMI failure.	
	461	Software port NMI failure.	
450		Chip initialization 6.	
440		Size memory above 64 KB.	
	440	Gate A20 failure.	System cannot switch into protected mode. Call your service representative.
	441	Unexpected interrupt in protected mode.	The system received an interrupt while in protected mode (probably while testing memory). If problem persists, call your service representative.
430		Interval timer 2 test.	
	430	Timer 2 failure.	Call your service representative.

POST and Boot Error Messages 390-330

Post No.	Error No.	Message	Solution
390		Initialize keyboard flags.	
370		Test keyboard.	
	370	Keyboard controller failure.	Solutions for messages 370-374: Check the keyboard connection. If the connection is good, the keyboard controller may have failed. If the problem persists, call your service representative.
	371	Keyboard clock line failure.	
	372	Keyboard data line failure.	
	373	Keyboard stuck key failure.	
	374	Keyboard failure.	
350		Re-initialize keyboard controller.	
330		Initialize auxiliary device.	

POST and Boot Error Messages 310-296

Post No.	Error No.	Message	Solution
310		Initialize keyboard controller output port.	
300		Initialize gate A20.	
290		Test memory above 64 KB.	
	290	Memory parity failure at xxxx:0000 to xxxx:FFFF.	Solutions for messages 290-296: One of the baseboard SIMMs or its associated circuitry failed. Replace defective SIMM. If problem persists, call your service representative.
	291	Memory data line failure at xxxx:0000 to xxxx:FFFF.	
	292	Memory odd/even logic failure at xxxx:0000 to xxxx:FFFF.	
	293	Memory double word logic failure at xxxx:0000 to xxxx:FFFF.	
	294	Memory high address failure at xxxx:0000 to xxxx:FFFF.	
	295	Memory address line failure at xxxx:yyyy, Read qqqq Expecting zzzz.	
	296	Memory read/write failure at xxxx:yyyy, Read qqqq Expecting zzzz.	

POST and Boot Error Messages 297-135

Post No.	Error No.	Message	Solution
	297	Decreasing available memory.	This message immediately follows any memory error message informing you that memory modules are failing. Verify that all SIMMs are installed correctly.
270		Initialize extended BIOS data area.	
250		Chipset initialization 7.	
230		Enable hardware interrupts.	
210		Read keyboard ID.	
190		Real time clock test.	
	190	Real time clock failure.	The internal battery for the clock is probably dead. Replace the real time clock device.
160		Coprocessor test.	
	160	Coprocessor failed.	The coprocessor failed or is missing.
150		Check for invalid configuration.	
140		Chipset initialization 8.	
	140	Shadow of system BIOS failed.	Call your service representative.
135		Access window into Setup.	

POST and Boot Error Messages 130-121

Post No.	Error No.	Message	Solution
130		Initialize diskette subsystem. **Note:** When the system starts booting up, the displayed message will remain on the screen for about ten seconds. Then the system will continue with the boot process.	
	130	Diskette drive failure.	Diskette drive has either failed or it is missing. Run the ECU or Setup. Make sure drive is present and that the diskette is properly inserted in the drive. If they are, the drive might have failed. If problem persists, call your service representative.
	131	Diskette drive 0 failure.	Diskette drive 0 has either failed or it is missing. See solutions for message 130.
	132	Diskette drive 1 failure.	Diskette drive 1 has either failed or it is missing. See solutions for message 130.
120		Initialize hard drive subsystem.	
	120	Hard drive configuration error.	Check the system configuration and drive type by running the ECU or Setup. If problem persists, call your service representative.
	121	Hard drive controller failure.	Check both ends of the controller signal cables. Check the system configuration and drive type by running the ECU or Setup. If problem persists, call your service representative.

POST and Boot Error Messages 122-060

Post No.	Error No.	Message	Solution
	122	Hard drive 0 failure.	Check both ends of the controller signal cables. Check the system configuration and drive type by running the ECU or Setup. If problem persists, call your service representative.
110		Chipset initialization 9.	
090		Enable cache.	
	090	Internal cache test failed-cache disabled.	Cache failed. Replace CPU module.
080		Initialize option ROMs.	
	080	xxxx0H optional ROM bad checksum=yyH.	Correct the address conflict or replace the ROM chip. If the problem persists, call your service representative.
	083	Shadow of BIOS at C0000H-C7FFFH failed.	For solutions to messages 083-085, call your service representative.
	084	Shadow of BIOS at C8000H-CFFFFH failed.	
	085	Shadow of BIOS at E0000H-C7FFFH failed.	
070		Set system clock.	
	070	Time of day clock not set.	Run Setup utility and set the time of day.
060		Check for electrical keylock.	
	060	Keyboard is locked--please unlock.	Unlock keyboard.

POST and Boot Error Messages 040-020

Post No.	Error No.	Message	Solution
040		Report configuration errors and prompt for configuration utility.	
	040	Configuration error; slot x.	Run the ECU. If problem persists, call your service representative.
	041	ID mismatch error; slot x. **Note:** EISA slots are scanned from slots 1 to 15. If an error occurs while scanning a slot, subsequent slots will not be scanned or initialized. The error must be corrected for proper operation.	The board in slot x is bad or its ID does not match what the ECU expects. The mismatch is due to the wrong board in slot x or the wrong configuration file for the board. Run the ECU to configure slot x or, if necessary, replace the board. If problem persists, call your service representative.

	042	Invalid ISA configuration information.	An ISA board is improperly configured. Run the ECU and verify all jumper and switch settings.
	043	Invalid EISA configuration information.	An EISA board is improperly configured. Run the ECU and verify all jumper and switch settings.
	044	EISA configuration NOT ASSURED!	This message appears the first time you boot your system after running Setup. You should run the ECU to properly configure your system.
020		Enable parity checking and NMI.	

POST and Boot Error Messages 000-004

Post No.	Error No.	Message	Solution
000		Boot.	
	000	Diskette read failure.	No diskette in drive A. Insert a diskette and try again. Run Setup utility. If problem persists, call your service representative.
	001	Not a bootable diskette.	Remove diskette from the drive and use a bootable diskette or boot from the hard drive. Run the ECU or Setup. If problem persists, call your service representative.
	002	No boot device available.	If booting from a diskette, it is a nonbootable type or the diskette drive has failed. Make sure the diskette in drive A contains an operating system. If booting from a hard drive, it might not be formatted or the drive may have failed. Make sure the hard drive contains an operating system. Run the ECU or Setup. If problem persists, call your service representative.
	003	Hard drive read failure.	The hard drive failed. Check the system configuration and drive type by running the ECU. Check both ends of the controller board cables and reseat the controller board. If problem persists, call your service representative.
	004	No boot sector on hard drive.	The hard drive is not formatted as a bootable disk. Boot from the diskette drive or make the hard drive bootable.

Countdown Codes for Run-time Errors

Post No.	Error No.	Message	Solution
980	980	Unresolved memory parity error.	Baseboard DRAM failed. Replace defective SIMM. Run the ECU. If problem persists, call your service representative.
	981	Memory parity error at xxxx:yyyy.	See solution for message 980.
	982	I/O expansion board NMI; slot x.	Run the ECU. If problem persists, call your service representative.
	983	Unresolved I/O expansion board NMI.	See solution for message 982.
	984	Expansion board disabled.	Configuration error or defective expansion board. Run the ECU. If problem persists, call your service representative.
	985	Fail-safe timer NMI.	Expansion board failed. Replaced the defective board. Run the ECU. If problem persists, call your service representative.
	986	Unresolved bus time-out NMI.	See solution for message 985.
	987	Bus time-out NMI; slot x.	Run the ECU. If problem persists, call your service representative.
	988	Software NMI.	See solution for message 987.
	970	Unexpected software interrupt.	There is an error in a software utility. Try turning the system off and then back on. If problem persists, call your service representative.
	971	Unexpected hardware interrupt.	This could be any hardware- related problem. Check all cables, connection, jumpers, and boards. If problem persists, call your service representative.

Beep Codes and Error Messages

If POST can display a message on the video display screen, it causes the speaker to beep twice as the message appears. However, POST cannot display messages when an error occurs before the video display is initialized. Instead, it emits a series of beeps.

For example, a failure of bit 3 in the first 64 KB of RAM is indicated by a 2-1-4 beep code (a burst of two beeps, a single beep, and a burst of four beeps). In addition, POST writes a value of 13H to I/O port 80H to enable debugging tools to identify the area of failure.

The related topics below list the beep codes and the values that POST writes to I/O port 80H when it encounters error conditions. They list fatal errors (errors that halt the system), nonfatal errors (errors that are not serious enough to halt the system), and other conditions that have no beep codes.

Related Topics:

Beep Codes 1-1-2 Through 2-1-4 for Fatal Errors
Beep Codes 2-2-1 Through 3-2-4 for Fatal Errors
Beep Codes 3-3-4 Through 3-4-2 for Nonfatal Errors

Beep Codes 1-1-2 Through 2-1-4 for Fatal Errors

Beep Code	Error Message	Port 80H
1-1-3	RTC write/read failure.	02H
1-1-4	ROM BIOS checksum failure.	03H
1-2-1	Programmable interval timer failure.	04H
1-2-2	DMA initialization failure.	05H
1-2-3	DMA page register write/read failure.	06H
1-3-1	RAM refresh verification failure.	08H
1-3-3	1st 64 KB RAM chip or data line failure.	0AH
1-3-4	1st 64 KB RAM odd/even logic failure.	0BH
1-4-1	1st 64 KB RAM address line failure.	0CH
1-4-2	1st 64 KB RAM parity test in progress/failure.	0DH
2-1-1	Bit 0 1st 64 KB RAM failure.	10H
2-1-2	Bit 1 1st 64 KB RAM failure.	11H
2-1-3	Bit 2 1st 64 KB RAM failure.	12H
2-1-4	Bit 3 1st 64 KB RAM failure.	13H

Beep Codes 2-2-1 Through 3-2-4 for Fatal Errors

Beep Code	Error Message	Port 80H
2-2-1	Bit 4 1st 64 KB RAM failure.	14H
2-2-2	Bit 5 1st 64 KB RAM failure.	15H
2-2-3	Bit 6 1st 64 KB RAM failure.	16H
2-2-4	Bit 7 1st 64 KB RAM failure.	17H
2-3-1	Bit 8 1st 64 KB RAM failure.	18H
2-3-2	Bit 9 1st 64 KB RAM failure.	19H
2-3-3	Bit A 1st 64 KB RAM failure.	1AH
2-3-4	Bit B 1st 64 KB RAM failure.	1BH
2-4-1	Bit C 1st 64 KB RAM failure.	1CH
2-4-2	Bit D 1st 64 KB RAM failure.	1DH
2-4-3	Bit E 1st 64 KB RAM failure.	1EH
2-4-4	Bit F 1st 64 KB RAM failure.	1FH
3-1-1	Slave DMA register failure.	20H
3-1-2	Master DMA register failure.	21H
3-1-3	Master interrupt mask register failure.	22H
3-1-4	Slave interrupt mask register failure.	23H
3-2-4	Keyboard/mouse controller test failure.	27H

Beep Codes 3-3-4 Through 3-4-2 for Nonfatal Errors

Beep Code	Error Message	Port 80H
3-3-4	Screen memory test failure.	2BH
3-4-1	Screen initialization failure.	2CH
3-4-2	Screen retrace test failure.	2DH

Before You Begin Moving Jumpers

WARNING

Before opening your system to change the jumper settings, turn the system power off by pressing the on/off push-button switch on the front panel, and unplug the AC power cord from the back of the chassis. Failure to disconnect power before opening the system can result in equipment damage.

CAUTION: An electrostatic discharge (ESD) can damage disk drives, add-in boards, and other components. Do all procedures only at an ESD workstation. If one is not available, you can provide some ESD protection by wearing an antistatic wrist strap attached to chassis ground on your system when handling components.

CAUTION: Operating the system with the covers removed can damage the system components. For proper cooling and airflow, always replace the covers before turning on the system.

System Baseboard Jumper Options

The system baseboard jumpers allow you to set specific operating parameters into the system.

A jumper is a small plastic-encased conductor (shorting plug) that slips over two jumper pins. To change a jumper setting, use a jumper removal tool or your fingers to remove it from its current location. Position the jumper over the two pins for the desired setting and press it onto the pins. Be careful not to bend the pins.

The illustration. shows the location of the baseboard jumpers. The table below lists the system baseboard jumpers and their factory default settings which are indicated with an asterisk (*).

Jumper	Description	Option	Install
E0190	Flash memory	Normal boot Recovery mode	1 to 2* 2 to 3
E0290	VGA	On (enable onboard video controller) Disable	1 to 2* 2 to 3
E0291	Floppy protection	R/W (read/write enable) Write protect	1 to 2* 2 to 3
E0292	NVRAM	Enable CLR (clear to factory defaults)	1 to 2* 2 to 3
E0390	Password	Enable Off (clear and disable)	1 to 2* 2 to 3
E0391	SIMM0	STD (standard) 1 MB, 2 MB, 4 MB, and 8 MB SIMMs 16 MB and 32 MB SIMMs	1 to 2* 2 to 3
E0392	SIMM1	STD (standard) 1 MB, 2 MB, 4 MB, and 8 MB SIMMs 16 MB and 32 MB SIMMs	1 to 2* 2 to 3
E0720	Video memory	Buffer size 512 KB VID1M (buffer size 1 MB)	1 to 2* 2 to 3
E0721	Flash reprogramming power	Flash write enable F-P (write disable)	1 to 2* 2 to 3
E0722	Video address	VID (starting address 03C3H) Starting address 46E8H	1 to 2* 2 to 3

Locations of Jumpers on the Baseboard

A, orientation of jumper pins 1, 2, and 3 for the baseboard jumpers.

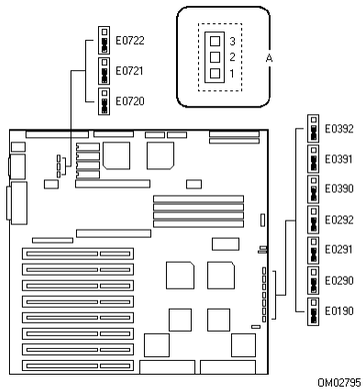

Flash Memory Jumper E0190

The flash memory jumper enables the BIOS flash memory special recovery mode. The system BIOS can be corrupted, for example: when the update procedure is aborted due to a power outage. The flash memory contains a protected area that cannot be corrupted. Code in this area is used to boot the computer from drive A when the BIOS has been corrupted. After booting, the flash update utility is used to automatically recover the system BIOS from the BIOS recovery files on the diskette.

CAUTION: To reprogram the BIOS, you need to ensure that the flash reprogramming power jumper E0721. is on pins 1 and 2, the default position. Do not change the NVRAM jumper E0292 at the same time.

Note: The flash reprogramming power jumper E0721 must be in the +12 V position, pins 1 and 2, during flash programming. Moving the jumper to pins 2 and 3 disables the ability to write to the flash memory. However, the jumper should be left in the +12 V position, pins 1 and 2.

If you have mapped the BIOS of an add-in board to any part of the E0000H address range, you must either map it to another area or physically remove the board from the system before a recovery procedure can be completed. You do not have to remove add-in boards for normal BIOS updates.

Recover the BIOS by doing the following:

1. Observe the precautions listed under Before You Begin Moving Jumpers.
2. Remove the system covers as described in your product guide.
3. Ensure that the flash reprogramming power jumper, E0721, is on pins 1 and 2 (default). This puts +12 V on the program pin of the flash BIOS components.
4. Move the flash memory boot jumper, E0190., from pins 1 and 2 (default) to pins 2 and 3.
5. Replace the system covers as described in your product guide.
6. Insert the flash memory update diskette in drive A.
7. Connect the power cord to the system and turn it on. After the system boots successfully, the speaker emits a single beep and the recovery process starts, which takes about three minutes.

   While in the recovery mode, there is no screen display on the monitor and the keyboard is disabled as the system automatically recovers the BIOS. Because there is no screen display, the recovery status is identified through these beep codes.

Beep Code	Message
2	Successful completion, no errors.
4	The system could not boot from the diskette. The diskette may not be bootable.
Continuous series of low beeps	The wrong BIOS recovery files are being used and/or the flash memory jumper E0721 is not set properly.

8. When the recovery process completes, the system speaker emits two beeps indicating a successful completion of the process.
9. Turn the system off and remove the covers.
10. Move the flash memory boot jumper, E0190, from pins 2 and 3 to pins 1 and 2 (default).
11. Replace the system covers.
12. Remove the flash memory update diskette from drive A.
13. After running the special recovery mode, run the ECU to specify a new password.

VGA Jumper E0290

The VGA jumper controls the onboard video controller. In most cases the system detects an installed add-in board and disables the onboard video controller. If you suspect that the add-in board is not being detected correctly, disable the controller by doing the following:

1. Observe the precautions listed under Before You Begin Moving Jumpers.
2. Remove the system covers as described in your product guide.

3. Move the video jumper E0290A9IE9. from pins 1 and 2 to pins 2 and 3.
4. Replace the system covers as described in your product guide.
5. After disabling the onboard video controller, run the ECU to specify the new setting.

Floppy Protection Jumper E0291

The floppy protection jumper is used as a security device that controls writing to diskettes in the system diskette drives. For example, it can be used to prevent users from copying information from the system hard disk drives to a diskette. To write protect a disktte drive with this jumper, do the following procedure:

1. Observe the precautions listed under Before You Begin Moving Jumpers.
2. Remove the system covers as described in your product guide.
3. Move the floppy protection jumper, E0291A9IE9., from pins 1 and 2 to pins 2 and 3.
4. Replace the system covers as described in your product guide.

NVRAM Jumper E0292

To reset the system's NVRAM and real-time clock (RTC) chip to factory default values, do the procedure listed below.

Note: The flash reprogramming power jumper E0721 must be in the +12 V position, pins 1 and 2 (default)., during NVRAM programming. Moving the jumper to pins 2 and 3 disables the ability to write to NVRAM. However, the jumper should be left in the +12 V position, pins 1 and 2.

1. Observe the precautions listed under Before You Begin Moving Jumpers.
2. Remove the system covers as described in your product guide.
3. Move the NVRAM jumper E0292. from pins 1 and 2 to pins 2 and 3.
4. Ensure that the flash reprogramming power jumper, E0721, is on pins 1 and 2 (default). This puts +12 V on the program pin of the flash BIOS components.
5. Replace the system covers as described in your product guide.
6. Connect the power cord to the system, turn the system on, and wait for POST. to complete. This will automatically reprogram the NVRAM and RTC to their default settings.
7. Turn the system off and disconnect the power cord from the system.
8. Remove the system covers.
9. Move the NVRAM jumper E0292 from pins 2 and 3 back to pins 1 and 2.
10. Replace the system covers.
11. After resetting the NVRAM, run the ECU to configure your system if possible, if not, run the Setup utility.

Password Jumper E0390

To clear your system password, do the following procedure:

1. Observe the precautions listed under Before You Begin Moving Jumpers.
2. Remove the system covers as described in your product guide.
3. Move the password jumper E0390. from pins 1 and 2 to pins 2 and 3.
4. Replace the system covers as described in your product guide.
5. Connect the power cord to the system, turn the system on, and wait for POST. to complete. This automatically clears the password.
6. Turn off the system and disconnect the power cord.
7. Remove the system covers.
8. Move the password jumper E0390 back to pins 1 and 2.
9. Replace the system covers.
10. Run the ECU to specify a new password.

SIMM0 Jumper E0391

The SIMM0 jumper is set to STD (standard) mode, the default position pins 1 and 2, when bank 0 contains 1 MB, 2 MB, 4 MB, or 8 MB SIMMs. For 16 MB or 32 MB SIMMs, this jumper must be moved to pins 2 and 3.

Note: Bank 0 refers to SIMM sockets J0550 and J0551 on the system baseboard.

To increase the bank 0 size, do the following procedure:

1. Observe the precautions listed under Before You Begin Moving Jumpers.
2. Remove the system covers as described in your product guide.
3. Move the SIMM0 jumper E0391. from pins 1 and 2 to pins 2 and 3.
4. Replace the system covers as described in your product guide.

SIMM1 Jumper E0392

The SIMM1 jumper is set to STD (standard) mode, the default position pins 1 and 2, when bank 1 contains 1 MB, 2 MB, 4 MB, or 8 MB SIMMs. For 16 MB or 32 MB SIMMs, this jumper must be moved to pins 2 and 3.

Note: Bank 1 refers to SIMM sockets J0650 and J0651 on the system baseboard.

To increase the bank 1 size, do the following procedure:

1. Observe the precautions listed under Before You Begin Moving Jumpers.
2. Remove the system covers as described in your product guide.
3. Move the SIMM1 jumper E0392. from pins 1 and 2 to pins 2 and 3.
4. Replace the system covers as described in your product guide.

Video Memory Jumper E0720

The video memory jumper allows you to increase the onboard video buffer size from 512 KB to 1 MB.

Note: Only DRAMs from certain manufacturers have been tested for compatibility with the X-series deskside/LX system. Contact your sales representative or dealer for a list of approved manufacturers and their devices.

The following procedure tells how to increase the buffer size:

1. Observe the precautions listed under Before You Begin Moving Jumpers.
2. Remove the system covers as described in your product guide.
3. Install four, 256 K x 4, 60 ns DRAMs in the following system baseboard sockets: U0730, U0731, U0732, and U0830.
4. To increase the onboard video buffer size from 512 KB to 1 MB, move the video memory jumper E0720. from pins 1 and 2 to pins 2 and 3.
5. Replace the system covers as described in your product guide.

Flash Reprogramming Power Jumper E0721

When the flash reprogramming power jumper is on pins 2 and 3, the flash BIOS is protected and cannot be updated. This setting also protects the BIOS and EISA Configuration information and does not allow the user to change any system settings. The default position, pins 1 and 2, lets the user enter and modify selections with the ECU or Setup utility. To use or run these utilities, do the procedure listed below.

Note: When you install EISA add-in boards in your system, you must use the ECU to modify the flash.

CAUTION: Ensure that the flash reprogramming power jumper E0721. is on pins 1 and 2 (default). Do not change the NVRAM jumper E0292 at the same time.

1. Observe the precautions listed under Before You Begin Moving Jumpers.
2. Remove the system covers as described in your product guide.
3. Ensure that the flash reprogramming power jumper E0721 is on pins 1 and 2.
4. Replace the system covers as described in your product guide.

5. Connect the power cord to the system, turn the system on, and wait for POST. to complete.
6. Reboot the system with the ECU diskette or enter Setup to update the BIOS.

If you want to write-protect the flash memory, move the flash reprogramming power jumper E0721 to pins 2 and 3. To do this, repeat steps 2 and 4 above.

Video Address Jumper E0722

The video address jumper determines which I/O port the onboard Western Digital WD90C31 super VGA controller uses for its internal AT mode setup port. The starting address of the default port is 03C3H. To change the starting address to 46E8H, do the following procedure:

1. Observe the precautions listed under Before You Begin Moving Jumpers.
2. Remove the system covers as described in your product guide.
3. Move the video address jumper E0722. from pins 1 and 2 to pins 2 and 3 to change the starting address of the I/O registers to 46E8H.
4. Replace the system covers as described in your product guide.

Memory Map

Address Range	Amount	Function
00000H to 07FFFH	512 KB	Base system memory
80000H to 9FFFFH	128 KB	Base memory enabled in Setup
0A0000H to 0BFFFFH	128 KB	Video RAM
0C0000H to 0C7FFFH	32 KB	Off board video BIOS (can be shadowed) AIC-7770 SCSI BIOS (can be shadowed)
0C8000H to CFFFFH	32 KB	Adapter BIOS extensions (can be shadowed)
0D0000H to DFFFFH	64 KB	Adapter BIOS extensions
0E0000H to 0E7FFFH	32 KB	Onboard WD90C31 video BIOS (can be shadowed)
0E8000H to E9FFFH	8 KB	EISA configuration data
0EA000H to 0EBFFFH	8 KB	OEM user memory area
0EC000H to 0EFFFFH	16 KB	Recovery BIOS
0F0000H to FFFFFH	64 KB	System BIOS
100000 to FFFFFFF	15 MB	Extended Memory
0C8000H to 0DFFFFH	96 KB	Reserved for ROM and RAM on addin boards
0H to 800FFFFFH	2 GB + 1 MB	Limit of the X-series architecture

Related Topics:

Graphic View of System Memory Map

Graphic View of System Memory Map

A, extended memory; *B*, high memory; *C*, conventional memory; *D*, flash ROM area; *E*, video BIOS alias area; *F*, video memory; *G*, system BIOS; *H*, recovery BIOS (16 KB); *I*, user area (8 KB); *J*, EISA configuration (8 KB); *K*, video BIOS (32 KB).

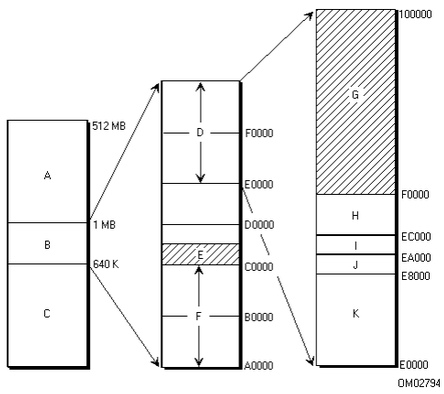

I/O Map

I/O Address	Device
000 - 00F	Slave DMA controller 1
020 - 021	Master Interrupt controller 1
026	Configuration controller index registers
027	Configuration controller data registers
040 - 043	Interval timer 1
048 - 04B	Interval timer 2
060, 064	Keyboard/mouse controller
061	NMI and diagnostic port
070	Real-time clock
070	Enable NMI
071	Real-time clock
078	BIOS loop timer
080	Power-on self test (POST) error codes
081 - 08F	DMA page register
092	System control port
0A0 - 0A1	Slave interrupt controller 2
0C0 - 0DE	Master DMA controller 2
0F0	Reset numeric coprocessor
0F8 - 0FF	Numeric coprocessor
1F0 - 1F8	IDE hard drive controller
278 - 27B	Parallel port 2 (LPT2); parallel port 3 (PS/2-compatible)
2C0 - 2DF	Clock calendar
2E8 - 2EF	Serial port 4 (COM4)
2F8 - 2FF	Serial port 2 (COM2)
378 - 37F	Parallel port 1 (LPT1); parallel port 2 (PS/2-compatible)
3B0 - 3BB	WD90C31 onboard video registers
3BC - 3BE	Parallel port 3 (LPT3); parallel port 1 (PS/2-compatible)
3BF - 3DF	16C552 registers
3E8 - 3EF	Serial port 3 (COM3)
3F0 - 3F5	Onboard floppy controller
3F6	Onboard IDE hard drive controller
3F7	Onboard IDE read
3F7	Onboard Floppy controller read/write
3F8 - 3FF	Serial port 1 (COM1)
400 - 40B	Extended DMA controller 1 registers
40C - 40F	Extended control/test registers
461 - 464	Extended NMI register
464 - 465	Extended bus master
480 - 48F	Extended DMA page register
4C2 - 4CE	Extended DMA 2 registers
4D0	Extended interrupt 1
4D1	Extended interrupt 2
4D4	Extended DMA 2 chaining
4D4	Extended DMA 2 write mode
C02 - C04	System baseboard configuration information

C80 - C83	System baseboard EISA ID register
C84	System baseboard enable
C85-C87	Reserved
9xxx-9FFF	Onboard AIC-7770 SCSI controller

Interrupts

IRQ	Device
NMI	Parity error
0	Reserved, interval timer
1	Reserved, keyboard buffer full
2	Reserved, cascade interrupt from slave PIC
3	Onboard serial port 2 (COM2), if enabled
4	Onboard serial port 1 (COM1), if enabled
5	LPT2, if enabled
6	Onboard floppy controller, if enabled
7	LPT1, if enabled
8	Real-time clock (RTC)
9	User definable; it can be set for EISA add-in boards using the ECU
10	COM3; if enabled, it can be set for EISA add-in boards using the ECU
11	COM4; if enabled, it can be set for EISA add-in boards using the ECU AIC-7770; if enabled, it can be set for EISA add-in boards using the ECU
12	Onboard PS/2 mouse port, if enabled
13	Reserved, math coprocessor
14	IDE hard drive controller, if enabled
15	User definable; using the ECU, it can be set for the following: · EISA add-in boards · IDE hard drive controller · onboard video, programmable to 9, 10, 11, or 15 · onboard SCSI, programmable to 9, 10, 11, or 15 (ECU limits SCSI to three choices)

Direct Memory Access (DMA) Channels

Channel	Device
0	(add-in board)
1	(add-in board)
2	Floppy disk drive
3	IDE hard disk drive
4	Reserved
5	(add-in board)
6	(add-in board)
7	(add-in board)

System Baseboard SIMMs

The system baseboard contains four SIMM sockets: J0550 and J0551 (bank 0) and J0650 and J0651 (bank 1). Each socket can hold a single-sided or a double-sided, 80 ns, 36-bit fast-page SIMM module with a capacity of 1, 2, 4, or 8 MB. Each socket can also hold a singlesided or a doublesided, 70 ns, 36-bit fast-page SIMM module with a capacity of 16 or 32 MB. The baseboard will support up to 128 MB with four 32 MB SIMMs. Different-size SIMMs can be mixed in the system; however, they must be installed in like-sized pairs. Each pair can be of different size. You can install SIMMs in two or all four of the SIMM sockets (one or three installed SIMMs are not supported).

For information about the system memory map, see "System Baseboard"

For information about setting the SIMM memory bank jumpers, see "SIMM0 Jumper E0391" and "SIMM1 Jumper E0392"

When you install SIMMs in the sockets on the baseboard, you must start with socket J0550. When you remove SIMMs from the sockets, you must start with the first SIMM-filled socket closest to the CPU module connector J0770.

CAUTION: Mixing dissimilar metals may cause failures.

- SIMMs with tin-lead alloy plated edge connectors must be installed only in tin-lead alloy plated sockets.
- SIMMs with gold-lead alloy plated edge connectors must be installed only in gold-lead alloy plated sockets.

Note: Only SIMMs from JEDEC-compatible manufacturers have been tested for compatibility with the X-series deskside/LX system. Contact your sales representative or dealer for a list of approved devices.

Related Topics:

Baseboard SIMM Jumpers
Installing System Baseboard SIMMs

Baseboard SIMM Jumpers

The table below lists the jumpers and their factory default settings for each memory bank on the baseboard. If you install a pair of 16 MB or 32 MB SIMMs, you must move the memory bank jumper. from pins 1 and 2 to pins 2 and 3. In the figure, A shows the locations of the baseboard SIMM sockets.

Bank	Jumper	Position	SIMM Size	SIMM Speed
0 (J0550 and J0551)	E0391	1 to 2* 2 to 3	1, 2, 4, and 8 MB 16 and 32 MB	70 ns or 80 ns 70 ns
1 (J0650 and J0651)	E0392	1 to 2* 2 to 3	1, 2, 4, and 8 MB 16 and 32 MB	70 ns or 80 ns 70 ns

* Factory default setting.

Installing System Baseboard SIMMs

When properly installed, the SIMM module is oriented at an angle of 90° relative to the system baseboard; see F in the figure.

CAUTION: Use extreme care when installing a SIMM module. Applying too much pressure can break the retaining clips or damage the socket slot.

Note: SIMM modules are keyed and can be inserted in only one way.

1. Observe the precautions listed under "Before You Begin Moving Jumpers."
2. Remove the system covers, CPU module, and memory module (if installed) as described in your product guide.
3. Holding the SIMM module only by the edges, remove it from its antistatic package.
4. With the notched edge of the SIMM (E in the figure) facing towards the left edge of the system baseboard, position the SIMM at about a 45° angle relative to the socket on the baseboard (1 in the figure). The small notch in the middle of the bottom edge of the SIMM mates with the raised bump in the SIMM socket.

   Beginning with socket J0550, insert the bottom edge of the SIMM into the socket and press in firmly on the SIMM until it seats correctly (1 in the figure).
5. When the SIMM seats correctly, hold it at each end and gently push the top edge towards the retaining clips (C in the figure) of the socket connector until the SIMM snaps into place (2 in the figure). The small horizontal posts by the retaining clips will pass through the holes in the ends of the SIMMs (F in the figure).

   If the SIMM does not install correctly, gently push the retaining clips in opposite directions just enough so that you can pull away the top edge of the SIMM and try again.
6. Repeat the above steps to install the remaining SIMMs in the sockets. Fill the sockets in this order: J0550, J0551, J0650, and J0651.
7. Replace the CPU module, memory module, and system covers as described in your product guide.
8. Run the ECU to properly attribute the additional memory. Failure to do so may degrade the performance of your system.

Note: Running Setup will not attribute the memory.

Installing the SIMMs

A, SIMM sockets; *B*, SIMM module; *C*, retaining clip; *D*, SIMM socket; *E*, notched edge of SIMM; *F*, properly installed SIMM module.

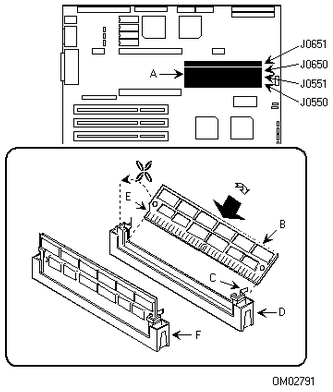

Related Topics:

Removing System Baseboard SIMMs

Removing System Baseboard SIMMs

CAUTION: Use extreme care when removing a SIMM. Too much pressure can break the retaining clips or damage the socket slot. Apply only enough pressure on the retaining clips to release the SIMM.

1. Observe the precautions listed under "Before You Begin Moving Jumpers."
2. Remove the system covers, CPU module, and memory module (if installed) as described in your product guide.
3. Remove the SIMM modules one at a time, starting with socket J0651, J0650, J0551, and J0550 (see A in the figure).
4. Gently push the retaining clips (1 in the figure) in opposite directions just enough so that you can tilt the top edge of the SIMM away from the clips (2 in the figure).
5. Carefully lift the SIMM away from the socket (3 in the figure) and store it in an antistatic package.
6. Repeat the above steps to remove the remaining SIMMs.
7. Replace the CPU module, memory module, and system covers as described in your product guide.
8. Run the ECU to properly attribute the remaining memory. Failure to do so may degrade the performance of your system.

Note: Running Setup will not attribute the memory.

Removing the SIMMs

A, SIMM sockets; *B*, SIMM module; *C*, retaining clip; *D*, SIMM socket; *E*, properly installed SIMM module.

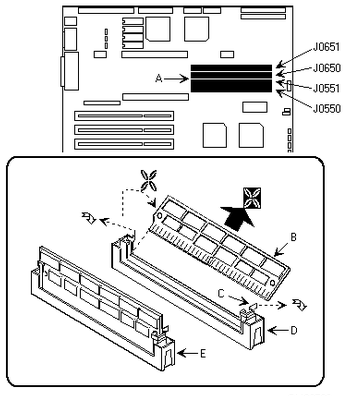

Video Memory DRAMs

The system baseboard comes with 512 KB of onboard video memory that allows pixel resolutions of 640 x 480 and 800 x 600 in 256 colors, and 1024 x 768 in 16 colors.

The video memory buffer size can be increased from 512 KB to 1 MB by installing four, 256 K x 4, 60 ns fast-page DRAMs in the following system baseboard sockets: U0730, U0731, U0732, and U0830. Adding these DRAMs allows 132 column text modes and pixel resolutions of 640 x 480, 800 x 600, and 1024 x 768 in 256 colors. Depending on the environment, the controller displays up to 32,000 colors in some video resolutions.

Note: Only DRAMs from certain manufacturers have been tested for compatibility with the X-series deskside/LX system. Contact your dealer or sales representative for a list of approved manufacturers and their devices.

For information about setting the video memory buffer size jumper, see "Video Memory Jumper E0720."

Related Topics:

Installing Video Memory DRAMs

Installing Video Memory DRAMs

1. Observe the precautions listed under "Before You Begin Moving Jumpers."
2. Remove the system covers as described in your product guide.
3. Remove a 256 K x 4, 60 ns DRAM from its protective package and align the notched end (C) of the DRAM (D) with the notched end of socket U0730 (E) on the baseboard.
4. Press the DRAM down firmly until it is fully seated in the socket (E). Be careful not to bend the pins.
5. Repeat steps 3 and 4 above successively to install DRAMs in sockets U0731, U0732, and U0830.
6. To increase the onboard video memory buffer size from 512 KB to 1 MB, move the video memory jumper E0720 from pins 1 and 2 to pins 2 and 3 (A).
7. Replace the system covers as described in your product guide.

DRAM Sockets

A, E0720 jumper pins (1 to 2, 512 KB) (2 to 3, 1 MB); *B*, DRAM and socket; *C*, key notch; *D*, DRAM chip; *E*, socket.

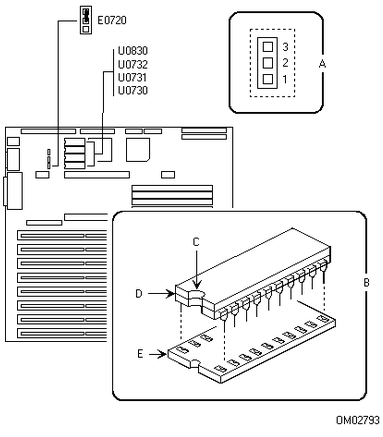

Related Topics:

Removing Video Memory DRAMs

Removing Video Memory DRAMs

1. Observe the precautions listed under "Before You Begin Moving Jumpers."
2. Remove the system covers as described in your product guide.
3. Find DRAM sockets U0730, U0731, U0732, and U0830 on the system baseboard.
4. To remove a DRAM from its socket, use a chip extraction tool. Gently pry up each end of the chip and pull it straight up out of the socket.
5. Place the DRAM on an antistatic surface.
6. Repeat the steps 4 and 5 successively to remove the remaining DRAMs.
7. To set the onboard video memory buffer size to 512 KB, the default setting, move the video memory jumper E0720 from pins 2 and 3 to pins 1 and 2 (A).
8. Replace the system covers as described in your product guide.

Parts List

Should you need to replace a part in your X-series deskside/LX system, you may find the parts list helpful. The illustrations for parts 1-7 and 8-13 show the parts by item number. For information about prices and delivery, contact your sales representative or dealer.

Item No.	Part No.	Description
1	611945	PBA (printed board assembly), system front panel board
2	202123-001	230 watt power supply
3	612413	+12 volt fan (axial, variable speed)
4	515524	Module retaining bracket for CPU and memory modules
5	616738-003*	Snap-in, black plastic, peripheral slide rail A, 616738-001 (no screws)
6	616783-003*	Snap-in, black plastic, peripheral slide rail B, 616738-002 (no screws)
7	611494-001	Lock assembly with key
8	507033-001	Plastic filler panel for inner panel and door assembly
9	516398	Grounding clip for the peripheral snap-in slide rail
10	610547	Activity LED cable for SCSI hard disk drives (baseboard to host adapter board)
11	613328-001	Plastic front door bezel kit
12	612060-001	Chassis assembly (includes cover and bezels)
13	611494-004	Master key and lock assembly

* Part number 616738-003 consists of five type A slide rails, 616738-001, and five type B slide rails, 616738-002.

Spare Parts (1-7) Illustration

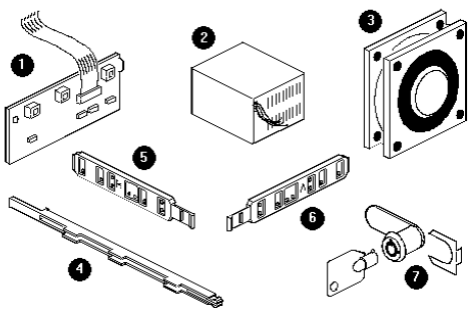

OM02944

1	611945	PBA (printed board assembly), system front panel board
2	202123-001	230 watt power supply
3	612413	+12 volt fan (axial, variable speed)
4	515524	Module retaining bracket for CPU and memory modules
5	616738-003*	Snap-in, black plastic, peripheral slide rail A, 616738-001 (no screws)
6	616783-003*	Snap-in, black plastic, peripheral slide rail B, 616738-002 (no screws)
7	611494-001	Lock assembly with key

* Part number 616738-003 consists of five type A slide rails, 616738-001, and five type B slide rails, 616738-002.

Spare Parts (8-13) Illustration

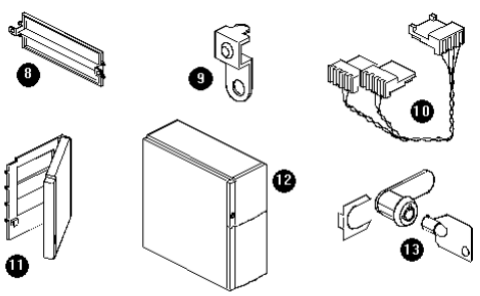

OM02945

8	507033-001	Plastic filler panel for inner panel and door assembly
9	516398	Grounding clip for the peripheral snap-in slide rail
10	610547	Activity LED cable for SCSI hard disk drives (baseboard to host adapter board)
11	613328-001	Plastic front door bezel kit
12	612060-001	Chassis assembly (includes cover and bezels)
13	611494-004	Master key and lock assembly